CONTROL TECHNIQUES
DYNAMICS

SERVO MOTOR SERIES

TECHNICAL DATA

High performance AC brushless
servo motors and servo drives

Nidec
All for dreams

Nidec

All for dreams

#1 for advanced motor and drive technology

Nidec Corporation is a global manufacturer of electric motors and drives. Founded in 1973, Nidec has worldwide operations and a workforce of more than 110,000 who develop, manufacture and install motors, drives and control systems in industrial plants, automobiles, home appliances, office equipment and information technology.

110,000
EMPLOYEES WORLDWIDE

$13.7B
GROUP TURNOVER

70+
COUNTRIES

230+
COMPANIES

CONTROL TECHNIQUES™

DRIVE SPECIALISTS SINCE 1973

Drives: they're what we do. Whether you're designing a new machine or installing a replacement, we know you need quick delivery and an easy set up, with the confidence that your drive's going to keep on performing with accurate control.

So leave it to the specialists. We've dedicated ourselves to designing and manufacturing variable speed drives since 1973. This means quick set up, high reliability, maximum motor control and fast, efficient service.

1,000+ OEM CUSTOMERS

5M+ INSTALLED DRIVES

1,500+ EMPLOYEES WORLDWIDE

70 COUNTRIES

Outstanding performance

The outstanding performance of our drives is the fruit of over 45 years of engineering experience in drive design.

Technology you can rely on

Robust design and the highest build quality ensure the enduring reliability of the millions of drives installed around the world.

Open design architecture

Based on open design architecture, our drives integrate with all primary communication protocols.

Global reach, local support

Highly experienced, locally based Application Engineers design and support drive technology to provide maximum value, wherever you are in the world.

Embedded intelligence

Precision motor control is combined with high performance embedded intelligence, ensuring maximum productivity and efficiency of your machinery.

A part of the Nidec Group

Unimotor fm
(Inc. Geared and Fanblown)

& Unimotor hd
(Inc. Geared and Low Voltage)

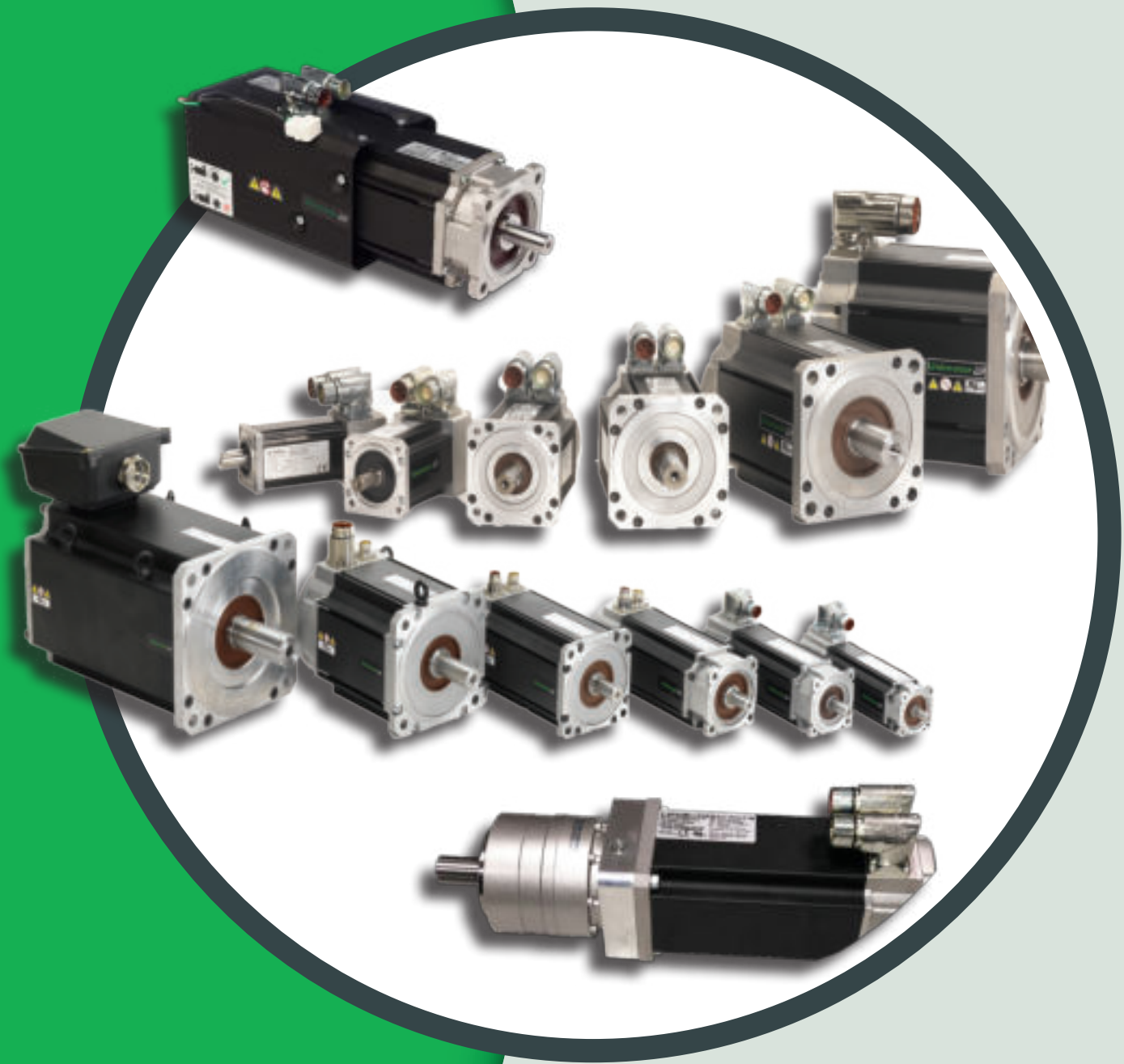

Contents

1 Introduction to Unimotor fm 6

1.1 Overview 6
1.2 Ordering Information 8
1.3 Ratings 10
1.4 Peak Torque Information 14
1.5 Dimensions 16

2 Introduction to Unimotor hd 22

2.1 Overview 22
2.2 Ordering Information 24
2.3 Dimensions & Ratings 26

3 Introduction to Unimotor Fan Blown 32

3.1 Overview 32
3.2 Ordering Information 34
3.3 Peak Torque Information 36
3.4 Dimensions & Ratings 38

4 Introduction to Geared Unimotor 42

4.1 Overview 42
4.2 Ordering Information 44
4.3 Dimensions & Ratings 46
4.4 Gearbox Specifications..... 52

5 Introduction to Unimotor hd Extra Low Voltage ... 58

5.1 Overview 58
5.2 Ordering Information 60
5.3 Dimensions & Ratings 62

6 Generic Information 66

6.1 Performance Definitions 66
6.2 Motor Derating 67
6.3 Nameplate 68
6.4 Motor Selection 68
6.5 Checklist of Operating Details 69
6.6 Points to Consider 70
6.7 Special Motor Requests 70
6.8 Calculating Load Torque 71
6.9 Undertaking Motor Heating Effects 72
6.10 Feedback Selection 74
6.11 Feedback Terminology 75
6.12 Additional Weights 77
6.13 Brake Specification 78
6.14 Radial Load 80
6.15 Bearing Life & Output Shaft Strength 87

7 Performance Graphs 94

7.1 Unimotor fm 97
7.2 Unimotor hd 102

8 Unidrive M & Digitax HD 105

8.1 Unidrive M - Continuous Duty 105
8.2 Digitax HD - Pulse Duty 106
8.3 Drive & Motor Combinations 107

9 Cables and Connections 128

9.1 General Cable Specifications 129
9.2 Order Information 130
9.3 Cable Construction 133
9.4 Connector Details 134
9.5 Diameter Selection 136
9.6 Maximum Cable Length 139

10 General Information 139

1 Introduction to Unimotor fm

1.1 Unimotor fm is a high performance brushless AC servo motor range designed for use in demanding continuous duty applications. The motors are available in six frame sizes with various mounting arrangements and motor lengths.

1.1.1 Faster set-up, optimized performance

When a Control Techniques servo drive is connected to a Unimotor fm fitted with a SinCos or Absolute encoder, it can recognize and communicate with the motor to obtain the "electronic nameplate" data. This motor data can then be used to automatically optimize the drive settings. This feature simplifies commissioning and maintenance, ensures consistent performance and saves time.

1.1.2 Custom built motors

As part of our commitment to you, we can design special products to meet your application specific requirements.

Custom built motors are identified by the code -S*** added to the end of the part number and can include custom shafts, connections or coatings.

e.g. SPZ - Motor is left unpainted
SON - Motor is fully painted

1.1.3 Wide range of accessories

In addition we offer a range of accessories to cover your system requirements:

- Feedback and power cables for static and dynamic applications
- Fan boxes
- Gearboxes
- Cable connectors

1.1.4 Accuracy and resolution to suit your application requirements

Choosing the right feedback device for your application is critical in getting optimum performance. Unimotor fm has a range of feedback options that offer different levels of accuracy and resolution to suit most applications:

- Resolver: robust for extreme applications and conditions – low accuracy, medium resolution
- Incremental encoder: high accuracy, medium resolution
- Inductive/capacitive SinCos/Absolute: medium accuracy, high resolution
- Optical/SinCos/Absolute: high accuracy, high resolution
- Single turn and multi-turn: Hiperface and EnDat protocols supported

1.1.5 Ideal for retrofit

Unimotor fm is an ideal retrofit choice with features to ensure it can integrate easily with your existing servo motor applications. Unimotor fm has been designed so that existing Unimotor customers can easily migrate to the new platform. All connector interface types and mounting dimensions remain the same. If you are planning to retrofit your system, Unimotor fm is the obvious choice.

1.1.6 Reliability and innovation

Unimotor fm is designed using a proven development process that prioritizes innovation and reliability. This process has resulted in a market leading reputation for both performance and quality.

1.1.7 Features

Unimotor fm is suitable for a wide range of industrial applications, due to it's extensive range of features:

- Torque range from 1.4 Nm to 136 Nm
- High energy parking brakes
- Numerous connector variants, including: vertical,90° low profile, 90° rotatable and hybrid box on frame size 250
- Various shaft diameters; keyed or plain
- IP65 conformance; sealed against water spray and dust when mounted and connected
- Low inertia for high dynamic performance; high inertia option available
- World class performance
- Winding voltages for inverter supply of 400 V and 220 V
- Rated speeds from 1,000 to 6,000 rpm and others available
- Thermal protection by PTC thermistor/ optional KTY84.130 sensor

1.1.8 Matched motor and drive combinations

Drives and motors from Control Techniques are designed to function as an optimized system. Unimotor fm is the perfect partner for Unidrive M.

Unimotor fm

1.1.9 Quick reference table

Frame size	PCD (mm)	Unimotor fm											
075	075												
095	100												
115	115												
142	165												
190	215												
250	300												
Stall	(Nm) 0	1.0	3.0	5.0	8.0	10.0	15.0	20.0	30.0	60.0	80.0	100.0	136.0
Inertia	(kg.cm2) 0	0.8	1.5	2.5	6.5	8.0	9.0	20.0	60.0	100.0	150.0	300.0	400.0

1.1.10 Conformance and standards

RoHS Compliant

1.2 ORDERING INFORMATION

1.2.1 UNIMOTOR FM - D + 10 LEAD TIME

Use the information below in the illustrations to create an order code for a Unimotor fm.

075	U	3	B	30	0	B
Frame size	Motor voltage	Magnet type	Stator length	Rated speed	Brake	Connection type
	075 - 142 frame	075 - 142 frame	075 frame	075 - 142 frame	075 - 142 frame	Size 1
075	**U** = 400V	**3** = Standard	B/D	**30** = 3000 rpm	**0** = Not fitted (Std)	**B** = Power and signal 90° rotatable
095			095 frame		**5** = Parking brake (fibre)	
115			B/C/D		**6** = Parking brake (resin)[1]	**C** = Power 90° rotatable and signal vertical
142			115 frame		[1]6 brake not available for 142 D & E lengths, or 190 or 250 frames.	
			B/C/D			**V** = Power and signal vertical
			142 frame			Size 1.5
			C/D/E			**J** = Power and signal 90° rotatable
						N = Power 90° rotatable and signal vertical
						M = Power and signal vertical

Express availability motors, available in ten days ex works

1.2.2 UNIMOTOR FM - STANDARD LEAD TIME

Additional options are available upon request but may require a longer lead time to complete, please check with the Drive Center.

095	U	3	B	40	0	B
Frame size	Motor voltage	Magnet type	Stator length	Rated speed	Brake	Connection type[2]
	075 - 190 frame	075 - 250 frame	075 frame	075 - 190 frame	075 - 250 frame	Size 1
075	**E** = 220V	**3** = Standard	A - C	**20** = 2000 rpm	**0** = Not fitted (Std)	**B** = Power and signal 90° rotatable
095	**U** = 400V	**6** = Peak	095 - 142	**40** = 4000 rpm*	**5** = Parking brake (fibre)	
115	250 frame		A - E	**60** = 6000 rpm*	**6** = Parking brake (resin)[1]	**C** = Power 90° rotatable and signal vertical
142	**U** = 400V		190	250 frame	**X** = Special	
190			A - H	**10** = 1000 rpm	[1]6 brake not available for 142 D & E lengths, or 190 or 250 frames.	**V** = Power and signal vertical
250			250*	**15** = 1500 rpm		
			D - F	**20** = 2000 rpm		**D** = Single cable, power & signal combined, 90° rotatable
				25 = 2500 rpm		Size 1.5
						J = Power and signal 90° rotatable
						N = Power 90° rotatable and signal vertical
						M = Power and signal vertical
						E = Single cable, power & signal combined, 90° rotatable
						Hybrid box
						H = Power hybrid box
						X = Special

Notes:

- *4000/6000rpm only available on certain lengths
- *250 D and E lengths, winding speed equal and above 2500rpm must use the hybrid box
- *250 F lengths, winding speed equal and above 2000rpm must use the hybrid box
- 190 - Lifting eyes will be fitted as standard on all 190 motors. This is to enable easy handling of these motors that are often over 25 kg in weight. If there is an issue with the lifting eyes causing an obstruction when fitting the mating cable then the lifting eyes may be removed once the motor is installed in the application.
- Hybrid Box Connection - Due to the increased power rating of some of the 190 motors a hybrid box is now being offered. A motor fitted with a hybrid box will not be UL marked. If a specific motor from the fm range that now has a hybrid box has previously been purchased with a connector and is working within an application please contact Control Techniques Dynamics to discuss options available.
- Single Cable must be fitted with KTY thermistor and is only available with certain feedback options and not all frame sizes.
  Please check before ordering.

A	CA		A	100		190	
Output shaft	**Feedback device**		**Inertia**	**PCD**		**Shaft diameter**	
075 - 142 frame	**075 - 142 frame**		**075 - 142 frame**	**075 frame only**			
A = Key	**AE** = Resolver		**A** = Standard + PTC	**075**	Std	**14.0**	B/C
F = Key and half key supplied seperately	**CA** = Incremental Encoder	CFS50	**B** = High + PTC	**095 frame only**			
	EC = Inductive EnDat SinCos Multi-turn	EQI 1331		**100**	Std	**19.0**	B/C/D
	FC = Inductive EnDat SinCos Single-turn	ECI 1319		**115 frame only**			
	RA = Optical Hiperface SinCos Multi-turn	SRM 50		**115**	Std	**19.0**	B/C
				115	Std	**24.0**	D
				142 frame only			
				165	Std	**24.0**	C/D/E

A	CA		A	100		190	
Output shaft	**Feedback device**		**Inertia**	**PCD**		**Shaft diameter**	
075 - 250 frame	**075 - 250 frame**		**075 - 190 frame**	**075 frame only**			
A = Key	**AE** = Resolver		**A** = Standard + PTC[3]	**075**	Std	**11.0**	A
B = Plain shaft	**CA** = Incremental Encoder	CFS50	**B** = High + PTC	**080**		**14.0**	B-D
E = Key with half key fitted	**EC** = Inductive EnDat SinCos Multi-turn	EQI 1331	**C** = Standard + KTY[4]	**085**		**19.0**	Max
F = Key and half key supplied separately	**FC** = Inductive EnDat SinCos Single-turn	ECI 1319	**D** = High + KTY			**XXX=**	Special
	EF = Inductive EnDat Multi-turn FS	EQI 1331 FS	**X** = Special	**095 frame only**			
	FF = Inductive EnDat Single-turn FS	ECI 1319 FS	**250 frame**	**100**	Std	**14.0**	A
	RA = Optical Hiperface SinCos Multi-turn	SRM 50	**A** = Standard + PTC	**098**		**19.0**	B-E
	SA = Optical Hiperface SinCos Single-turn	SRS 50	**C** = Standard + KTY	**115**		**22.0**	Max
	EB = Optical EnDat SinCos Multi-turn	EQN 1325	**D** = High + KTY			**XXX=**	Special
	FB = Optical EnDat SinCos Single-turn	ECN 1313	**X** = Special	**115 frame only**			
	GB = Optical EnDat Only Multi-turn	EQN 1337		**115**	Std	**19.0**	A-C
	HB = Optical EnDat Only Single-turn	ECN 1325		**130**		**24.0**	D/E
	NA = Sensorless					**24.0**	Max
	XX = Specials					**XXX=**	Special
				142 frame only			
				165	Std	**24.0**	A/E
				149		**32.0**	Max
						XXX=	Special
				190 frame only			
				215	Std	**32.0**	A-H
						42.0	Max
						XXX=	Special
				250 frame only			
				300	Std	**48.0**	D-F

Notes:

- Shaft sizing - Please ensure that the correct shaft size is selected to meet the application requirement.
- 142 Connector Rating - Due to the increased power rating of some of the 142 motors a type “J” or “M” size 1.5 power connector is now being offered. If a specific motor from the fm range that now has a “J” or “M” type connector has previously been purchased with a “B” or “C” or “V” size 1 connector and is working within an application please contact Control Techniques Dynamics to discuss the options available.
- Sensorless mode - Motor performance will be limited at low speed, please read feedback selection for details.
- Other feedback options available on request but may increase motor lead time. Please check before ordering.

[2]Not all options are available on all frames sizes, please check before ordering

[3]PTC thermistor = DIN44082

[4]KTY thermistor = KTY84

1.3 RATINGS

1.3.1 3 Phase VPWM drives 200-240Vrms - Δt= 100°C winding 40°C maximum ambient. All data subject to +/-10% tolerance

Motor Frame Size (mm)	075E3				095E3					115E3				
Frame length	A	B	C	D	A	B	C	D	E	A	B	C	D	E
Continuous stall torque (Nm)	1.4	2.7	3.7	4.7	2.5	4.5	6.3	7.9	9.3	3.9	7.4	10.8	13.7	16
Standard (3) Peak torque (Nm)	4.3	8	11.2	14	7.4	13.5	18.9	23.7	27.8	11.7	22.2	32.4	41	48
High (6) Peak torque (Nm)	7.2	13.3	18.6	23.4	11	20.3	28.4	35.6	41.6	15.6	29.6	43.2	54.6	64
Standard inertia (kg cm^2)	0.78	1.22	1.64	2.07	1.45	2.6	3.72	4.83	6	5.4	7.7	10	12.5	14.8
High Inertia (kg cm^2)	1.18	1.61	2.03	2.46	3.31	4.5	5.6	6.7	7.8	10	12.3	14.7	17.1	19.4
Winding thermal time constant (sec)	63	58	73	78	84	82	90	108	112	103	109	116	127	141
Standard motor weight (kg)	2.88	3.68	4.48	5.28	4.49	5.75	7.01	8.27	9.53	6.88	8.68	10.48	12.28	14.08
Number of poles	6	6	6	6	6	6	6	6	6	6	6	6	6	6
Speed 2000 (rpm)	Kt(Nm/A) = 1.4													
	Ke(V/Krpm) = 85.5													
Rated torque (Nm)	1.3	2.5	3.5	4.5	2.4	4.3	5.9	7.3	8.5	3.7	7.3	10.1	11.9	14.1
Stall current (A)	1	1.9	2.7	3.3	1.8	3.2	4.5	5.6	6.6	2.8	5.3	7.7	9.8	11.4
Rated power (kW)	0.27	0.52	0.73	0.93	0.51	0.9	1.23	1.53	1.77	0.77	1.53	2.12	2.49	2.95
R (ph-ph) (Ohms)	48.24	16.32	8.96	6.22	20.69	6.78	3.79	2.42	1.92	10.65	3.43	1.82	1.81	1.34
L (ph-ph) (mH)	87.47	39.77	24.68	19.15	57.78	26.10	16.36	11.83	9.75	55.83	19.43	12.31	9.50	7.68
Recommended power conn' size	1	1	1	1	1	1	1	1	1	1	1	1	1	1
Speed 3000 (rpm)	Kt(Nm/A) = 0.93													
	Ke(V/Krpm) = 57													
Rated Torque (Nm)	1.3	2.3	3.3	4.2	2.33	4.1	5.6	6.9	8.15	3.5	6.7	9.5	11.2	12.7
Stall Current (A)	1.55	2.85	4	5.02	2.63	4.84	6.77	8.49	9.95	4.19	7.96	11.61	14.68	17.2
Rated Power (kW)	0.41	0.72	1.04	1.31	0.73	1.29	1.76	2.17	2.56	1.1	2.1	2.98	3.52	3.99
R (ph-ph) (Ohms)	19.80	6.69	3.71	2.72	9.62	2.99	1.64	1.07	0.86	4.91	1.52	0.81	0.57	0.43
L (ph-ph) (mH)	37.20	16.8	10.69	8.27	26.29	11.47	7.15	5.16	4.35	20.26	8.63	5.47	4.35	3.41
Recommended power conn' size	1	1	1	1	1	1	1	1	1	1	1	1	1	HYBRID
Speed 4000 (rpm)	Kt(Nm/A) = 0.7													
	Ke(V/Krpm) = 42.75													
Rated Torque (Nm)	1.2	2.1	2.8	3.8	2.3	3.8	5.3	6.4	7.4	3	5.8	7.5	8.3	8.8
Stall Current (A)	2.06	3.79	5.31	6.67	3.5	6.43	9	11.29	13.21	5.57	10.57	15.43	19.5	22.86
Rated Power (kW)	0.5	0.86	1.17	1.59	0.94	1.59	2.2	2.68	3.1	1.26	2.43	3.12	3.46	3.69
R (ph-ph) (Ohms)	12.44	4.01	2.26	1.53	5.26	1.76	1.04	0.74	0.48	3.05	0.93	0.49	0.3	0.27
L (ph-ph) (mH)	23.35	9.62	6.32	4.63	14.94	6.67	4.52	3.53	2.44	12.44	5.13	3.34	2.25	2.18
Recommended power conn' size	1	1	1	1	1	1	1	1	1	1	1	1	1	HYBRID
Speed 6000 (rpm)	Kt(Nm/A) = 0.47													
	Ke(V/Krpm) = 28.5													
Rated Torque (Nm)	1.1	1.9	2.8	3.4	1.98	3.2	4.2	♦	♦	2.7	5	♦	♦	♦
Stall Current (A)	3.06	5.64	7.91	9.94	5.21	9.57	13.4	♦	♦	8.3	15.74	♦	♦	♦
Rated Power (kW)	0.68	1.21	1.73	2.14	1.24	2.01	2.64	♦	♦	1.7	3.14	♦	♦	♦
R (ph-ph) (Ohms)	5.37	1.81	1.02	0.68	2.33	0.73	0.46	♦	♦	1.5	0.41	♦	♦	♦
L (ph-ph) (mH)	9.8	4.42	2.88	2.06	6.57	2.77	2.07	♦	♦	6.08	2.34	♦	♦	♦
Recommended power conn' size	1	1	1	1	1	1	1	♦	♦	1	1	♦	♦	♦

♦ *not available*

- The information contained in this specification is for guidance only and does not form part of any contract.
- Control Techniques Dynamics have an ongoing process of development and reserves the right to change the specification without notice.
- Stall torque, rated torque and power relate to maximum operation tested in a 20 °C ambient at **12 kHz drive switching frequency.**

142E3					190E3								Motor Frame Size (mm)
A	B	C	D	E	A	B	C	D	E	F	G	H	Frame length
6.2	11	15.7	20.5	25	11.3	22.5	33.5	44.5	54	63	71	77	Continuous stall torque (Nm)
18.6	33	47.1	61.5	75	33.8	67.5	100.5	133.5	162	189	213	231	Standard (3) Peak torque (Nm)
24.8	44	62.8	82	100	N/A	N/A	N/A	N/A	N/A	N/A	N/A	N/A	High (6) Peak torque (Nm)
10.2	16.9	23.5	30.2	36.9	31.3	49.8	68.3	86.8	105.3	123.8	142.3	160.8	Standard inertia (kg cm^2)
23.2	29.8	36.5	43.1	49.8	69.8	88.3	106.8	125.3	143.8	162.3	180.8	199.3	High Inertia (kg cm^2)
145	148	188	206	249	194	214	215	216	251	285	425	564	Winding thermal time constant (sec)
8.81	11.66	14.51	17.36	20.21	12.62	18.08	23.54	28.99	34.44	39.9	45.35	50.81	Standard motor weight (kg)
6	6	6	6	6	8	8	8	8	8	8	8	8	Number of poles
Kt(Nm/A) = 1.4 Ke(V/Krpm) = 85.5													Speed 2000 (rpm)
5.9	10.4	14.7	18.5	21.5	10.8	20.6	29.4	37.9	44.3	50.5	54	56	Rated torque (Nm)
4.4	7.9	11.2	14.6	17.9	8	16.1	23.9	31.8	38.6	45	50.7	55	Stall current (A)
1.23	2.18	3.08	3.87	4.49	2.26	4.31	6.15	7.94	9.28	10.58	11.31	11.73	Rated power (kW)
5.56	1.54	0.8	0.51	0.4	1.81	0.50	0.25	0.19	0.13	0.1	0.08	0.05	R (ph-ph) (Ohms)
35.43	14.25	8.99	6.35	5.25	17.34	7.77	4.66	3.26	3.02	2.65	2.13	1.55	L (ph-ph) (mH)
1	1	1	1	1.5	1.5	1.5	1.5	1.5	1.5	HYBRID ONLY			Recommended power conn' size
Kt(Nm/A) = 0.93 Ke(V/Krpm) = 57													Speed 3000 (rpm)
5.5	9.5	12.8	16	18.15	10.3	19.4	26.5	33.2	34.2	35.2	36.2	37	Rated Torque (Nm)
6.67	11.83	16.88	22.04	26.88	12.1	24.19	36.02	47.85	58.06	67.74	76.34	82.8	Stall Current (A)
1.73	2.98	4.02	5.03	5.7	3.24	6.09	8.33	10.43	10.74	11.06	11.37	11.62	Rated Power (kW)
2.25	0.68	0.35	0.23	0.16	0.83	0.26	0.13	0.09	0.07	0.05	0.05	0.03	R (ph-ph) (Ohms)
14.68	6.33	3.89	3.66	2.23	7.94	3.87	2.46	1.81	1.55	1.17	1.36	0.88	L (ph-ph) (mH)
1	1	1	1.5	1.5	1.5	1.5	1.5	HYBRID ONLY					Recommended power conn' size
Kt(Nm/A) = 0.7 Ke(V/Krpm) = 42.75													Speed 4000 (rpm)
4.1	8.1	10.2	12.2	♦	8.2	18.2	23	29	♦	♦	♦	♦	Rated Torque (Nm)
8.86	15.71	22.43	29.29	♦	16.07	32.14	47.86	63.57	♦	♦	♦	♦	Stall Current (A)
1.72	3.37	4.27	5.11	♦	3.43	7.62	9.63	12.15	♦	♦	♦	♦	Rated Power (kW)
1.29	0.38	0.23	0.13	♦	0.46	0.14	0.07	0.06	♦	♦	♦	♦	R (ph-ph) (Ohms)
8.39	3.44	2.49	1.99	♦	4.34	2.18	1.39	1.26	♦	♦	♦	♦	L (ph-ph) (mH)
1	1	1.5	1.5	♦	1.5	1.5	HYBRID ONLY		♦	♦	♦	♦	Recommended power conn' size
Kt(Nm/A) = 0.47 Ke(V/Krpm) = 28.5													Speed 6000 (rpm)
3.2	♦	♦	♦	♦	♦	♦	♦	♦	♦	♦	♦	♦	Rated Torque (Nm)
13.19	♦	♦	♦	♦	♦	♦	♦	♦	♦	♦	♦	♦	Stall Current (A)
2.01	♦	♦	♦	♦	♦	♦	♦	♦	♦	♦	♦	♦	Rated Power (kW)
0.56	♦	♦	♦	♦	♦	♦	♦	♦	♦	♦	♦	♦	R (ph-ph) (Ohms)
3.67	♦	♦	♦	♦	♦	♦	♦	♦	♦	♦	♦	♦	L (ph-ph) (mH)
1	♦	♦	♦	♦	♦	♦	♦	♦	♦	♦	♦	♦	Recommended power conn' size

- All other figures relate to a 20 °C motor temperature. Maximum intermittent winding temperature is 140 °C.
- The recommended connector has to be selected using the connector manufacturer's de-rating values applied to a motor at full operational temperature.

RATINGS

1.3.2 3 Phase VPWM drives 380 - 480 Vrms - Δt= 100 °C winding 40 °C maximum ambient. All data subject to ± 10 % tolerance

Motor Frame Size (mm)	075U3				095U3					115U3				
Frame length	A	B	C	D	A	B	C	D	E	A	B	C	D	E
Continuous stall torque (Nm)	1.4	2.7	3.7	4.7	2.5	4.5	6.3	7.9	9.3	3.9	7.4	10.8	13.7	16
Standard (3) Peak torque (Nm)	4.3	8	11.2	14	7.4	13.5	18.9	23.7	27.8	11.7	22.2	32.4	41	48
High (6) Peak torque (Nm)	7.2	13.3	18.6	23.4	11	20.3	28.4	35.6	41.6	15.6	29.6	43.2	54.6	64
Standard inertia (kg cm²)	0.78	1.22	1.64	2.07	1.45	2.6	3.72	4.83	6	5.4	7.7	10	12.5	14.8
High Inertia (kg cm²)	1.18	1.61	2.03	2.46	3.31	4.5	5.6	6.7	7.8	10	12.3	14.7	17.1	19.4
Winding thermal time constant (sec)	63	58	73	78	84	82	90	108	112	103	109	116	127	141
Standard motor weight (kg)	2.88	3.68	4.48	5.28	4.49	5.75	7.01	8.27	9.53	6.88	8.68	10.48	12.28	14.08
Number of poles	6	6	6	6	6	6	6	6	6	6	6	6	6	6
Speed 2000 (rpm)	Kt (Nm/A) = 2.4													
	Ke (V/Krpm) = 147													
Rated torque (Nm)	1.3	2.5	3.5	4.5	2.4	4.3	5.9	7.3	8.5	3.7	7.3	10.1	11.9	14.1
Stall current (A)	0.6	1.1	1.6	1.9	1	1.9	2.6	3.3	3.9	1.6	3.1	4.5	5.7	6.7
Rated power (kW)	0.27	0.52	0.73	0.93	0.51	0.9	1.23	1.53	1.77	0.77	1.53	2.12	2.49	2.95
R (ph-ph) (Ohms)	148.5	52.2	27.3	19.97	64.08	20.88	10.46	7.46	5.09	32.92	10.68	5.25	3.7	2.75
L (ph-ph) (mH)	258.36	117.28	74.2	56.97	173.4	78.16	47.02	35.44	27.18	139.43	59.51	35.9	27.63	21.87
Recommended power conn' size	1	1	1	1	1	1	1	1	1	1	1	1	1	1
Speed 3000 (rpm)	Kt (Nm/A) = 1.6													
	Ke (V/Krpm) = 98													
Rated Torque (Nm)	1.3	2.3	3.3	4.2	2.3	4.1	5.6	6.9	8.2	3.5	6.7	9.5	11.2	12.7
Stall Current (A)	0.9	1.7	2.3	2.9	1.5	2.8	3.9	4.9	5.8	2.4	4.6	6.8	8.5	10
Rated Power (kW)	0.41	0.72	1.04	1.31	0.73	1.29	1.76	2.17	2.56	1.1	2.1	2.98	3.52	3.99
R (ph-ph) (Ohms)	62.08	21.07	12.54	7.81	26.7	8.63	4.67	3.16	2.27	14.74	4.37	2.3	1.53	1.23
L (ph-ph) (mH)	114.59	52.65	34.18	23.89	76.65	33.71	21.09	15.95	12.06	57.29	25.19	15.57	11.6	9.89
Recommended power conn' size	1	1	1	1	1	1	1	1	1	1	1	1	1	1
Speed 4000 (rpm)	Kt (Nm/A) = 1.2													
	Ke (V/Krpm) = 73.5													
Rated Torque (Nm)	1.2	2.1	2.8	3.8	2.3	3.8	5.3	6.4	7.4	3	5.8	7.5	8.3	8.8
Stall Current (A)	1.2	2.2	3.1	3.9	2	3.8	5.3	6.6	7.7	3.3	6.2	9	11.4	13.3
Rated Power (kW)	0.5	0.86	1.17	1.59	0.94	1.59	2.2	2.68	3.1	1.26	2.43	3.12	3.46	3.69
R (ph-ph) (Ohms)	38.01	12.71	6.49	4.94	16.14	5.22	2.61	1.81	1.4	8.49	2.61	1.31	0.84	0.66
L (ph-ph) (mH)	68.39	30.46	18.28	13.97	44.25	19.54	11.75	8.86	7.25	33.79	14.87	8.98	6.27	5.35
Recommended power conn' size	1	1	1	1	1	1	1	1	1	1	1	1	1	1
Speed 6000 (rpm)	Kt (Nm/A) = 0.8													
	Ke (V/Krpm) = 49													
Rated Torque (Nm)	1.1	1.9	2.8	3.4	2	3.2	4.2	♦	♦	2.7	5	♦	♦	♦
Stall Current (A)	1.8	3.3	4.7	5.8	3.1	5.6	7.9	♦	♦	4.9	9.3	♦	♦	♦
Rated Power (kW)	0.68	1.21	1.73	2.14	1.24	2.01	2.64	♦	♦	1.7	3.14	♦	♦	♦
R (ph-ph) (Ohms)	15.48	5.19	2.86	2.12	6.59	2.13	1.22	♦	♦	3.48	1.09	♦	♦	♦
L (ph-ph) (mH)	28.66	12.77	8.01	6.33	18.62	8.24	5.44	♦	♦	14.31	6.3	♦	♦	♦
Recommended power conn' size	1	1	1	1	1	1	1	♦	♦	1	1	♦	♦	♦

♦ *not available*

- The information contained in this specification is for guidance only and does not form part of any contract.
- Control Techniques Dynamics have an ongoing process of development and reserves the right to change the specification without notice.
- Stall torque, rated torque and power relate to maximum operation tested in a 20 °C ambient at **12 kHz drive switching frequency.**
- All other figures relate to a 20 °C motor temperature. Maximum intermittent winding temperature is 140 °C.
- The recommended connector has to be selected using the connector manufacturer's de-rating values applied to a motor at full operational temperature.

142U3					190U3								250U3			Motor Frame Size (mm)
A	B	C	D	E	A	B	C	D	E	F	G	H	D	E	F	Frame length
6.2	11	15.7	20.5	25	11.3	22.5	33.5	44.5	54	63	71	77	92	116	136	Continuous stall torque (Nm)
18.6	33	47.1	61.5	75	33.8	67.5	100.5	133.5	162	189	213	231	276	348	408	Standard (3) Peak torque (Nm)
24.8	44	62.8	82	100	N/A	N/A	N/A	N/A	N/A	N/A	N/A	N/A	N/A	N/A	N/A	High (6) Peak torque (Nm)
10.2	16.9	23.5	30.2	36.9	31.3	49.8	68.3	86.8	105.3	124	142.3	160.8	275	337	400	Standard inertia (kg cm^2)
23.2	29.8	36.5	43.1	49.8	69.8	88.3	106.8	125.3	143.8	162.3	180.8	199.3	408	502	597	High Inertia (kg cm^2)
145	148	188	206	249	194	214	215	216	251	285	425	564	439	486	608	Winding thermal time constant (sec)
8.81	11.66	14.51	17.36	20.21	12.62	18.08	23.54	28.99	34.44	39.9	45.35	50.81	61.5	69.8	78	Standard motor weight (kg)
6	6	6	6	6	8	8	8	8	8	8	8	8	10	10	10	Number of poles
Kt (Nm/A) = 2.4													Kt (Nm/A) = 5.4			250 frame Speed 1,000 (rpm)
Ke (V/Krpm) = 147													Ke (V/krpm) = 323			
5.9	10.4	14.7	18.5	21.5	10.8	20.6	29.4	37.9	44.3	50.5	54	56	75	92	106	Rated torque (Nm)
2.6	4.6	6.5	8.5	10.4	4.7	9.4	14	18.5	22.5	26.3	29.6	32.1	17.2	21.7	25.4	Stall current (A)
1.23	2.18	3.08	3.87	4.49	2.26	4.31	6.15	7.94	9.28	10.58	11.31	11.73	7.9	9.6	11.1	Rated power (kW)
14.64	4.71	2.38	1.60	1.11	6.15	1.54	0.83	0.5	0.37	0.28	0.26	0.23	0.61	0.48	0.34	R (ph-ph) (Ohms)
98.76	42.15	26.32	19.46	15.08	52.90	23.55	15	8.81	8.68	7.36	6.89	6.3	22.9	19.1	14.9	L (ph-ph) (mH)
1	1	1	1	1	1.5	1.5	1.5	1.5	1.5	1.5	1.5	1.5	1.5	1.5	1.5	Recommended power conn' size
Kt (Nm/A) = 1.6													Kt (Nm/A) = 3.6			250 frame Speed 1,500 (rpm)
Ke (V/Krpm) = 98													Ke (V/krpm) = 216			
5.5	9.5	12.8	16	18.2	10.3	19.4	26.5	33.2	34.2	35.2	36.2	37	67	76	84	Rated Torque (Nm)
3.9	6.9	9.8	12.8	15.6	7	14.1	20.9	27.8	33.8	39.4	44.4	48.1	25.8	32.5	38.1	Stall Current (A)
1.73	2.98	4.02	5.03	5.7	3.24	6.09	8.33	10.43	10.74	11.06	11.37	11.62	10.5	11.9	13.2	Rated Power (kW)
6.20	2.12	1.08	0.7	0.5	2.73	0.7	0.41	0.22	0.17	0.14	0.15	0.08	0.27	0.21	0.15	R (ph-ph) (Ohms)
42.97	19.11	12.06	8.91	6.7	23.50	10.47	7.35	4.89	3.86	3.6	3.06	2.42	10	8.6	6.6	L (ph-ph) (mH)
1	1	1	1	1	1.5	1.5	1.5	1.5	1.5	1.5	HYBRID ONLY		1.5	1.5	1.5	Recommended power conn' size
Kt (Nm/A) = 1.2													Kt (Nm/A) = 2.7			250 frame Speed 2,000 (rpm)
Ke (V/Krpm) = 73.5													Ke (V/krpm) = 162			
4.1	8.1	10.2	12.2	14	8.2	18.2	23	29	♦	♦	♦	♦	65	73	81	Rated Torque (Nm)
5.2	9.2	13.1	17.1	20.8	9.4	18.8	27.9	37.1	♦	♦	♦	♦	34.4	43.4	50.9	Stall Current (A)
1.72	3.37	4.27	5.11	5.86	3.43	7.62	9.63	12.15	♦	♦	♦	♦	10.2	11.5	12.7	Rated Power (kW)
3.64	1.18	0.61	0.41	0.29	1.35	0.38	0.21	0.14	♦	♦	♦	♦	0.15	0.1	0.08	R (ph-ph) (Ohms)
24.44	10.54	6.78	5.06	3.97	13.56	6.05	3.86	2.45	♦	♦	♦	♦	5.7	4.2	3.7	L (ph-ph) (mH)
1	1	1	1.5	1.5	1.5	1.5	1.5	1.5	♦	♦	♦	♦	1.5	HYBRID ONLY		Recommended power conn' size
Kt (Nm/A) = 0.8													Kt (Nm/A) = 2.1			250 frame Speed 2,500 (rpm)
Ke (V/Krpm) = 49													Ke (V/krpm) = 129			
3.2	5.2	♦	♦	♦	♦	♦	♦	♦	♦	♦	♦	♦	62	70	77	Rated Torque (Nm)
7.8	13.8	♦	♦	♦	♦	♦	♦	♦	♦	♦	♦	♦	43	54.2	63.6	Stall Current (A)
2.01	3.27	♦	♦	♦	♦	♦	♦	♦	♦	♦	♦	♦	9.7	11	12.1	Rated Power (kW)
1.63	0.53	♦	♦	♦	♦	♦	♦	♦	♦	♦	♦	♦	0.09	0.08	0.06	R (ph-ph) (Ohms)
11.08	4.78	♦	♦	♦	♦	♦	♦	♦	♦	♦	♦	♦	3.5	3.1	2.6	L (ph-ph) (mH)
1	1	♦	♦	♦	♦	♦	♦	♦	♦	♦	♦	♦	HYBRID ONLY			Recommended power conn' size

- The Unimotor fm 250 servo motor has been designed to give greatest motor efficiency up to a rated, or rms, speed of 1,500rpm. The range does include the optional speeds of 2,000rpm and 2,500rpm. These windings will allow the end user to enter the intermittent speed zone as well as the intermittent torque zone on the 250 motor.
- These higher speed windings are designed with optimum Kt values that allow increased speed without demanding very high currents.
- The Unimotor fm 250 is designed for S2 to S6 duties and as such the rms values play an important part in the motor selection for torque and speed.

1.4 PEAK TORQUE INFORMATION

On some of the frame sizes the full peak torque cannot be achieved at the full 100 % rms current level. As shown the 075 motor is not affected by the reduced levels and remains constant up to 100% rms current, whereas the 250 motors all show a drop at some point along the % rms current line.

U3	Peak factor @ 0 - 100% rms	
075	3	
095	Peak Factor 0% - 88% rms	Peak Factor @ 100% rms
	3	2
115	Peak Factor 0% - 86% rms	Peak Factor @ 100% rms
	3	1.5
142	Peak Factor 0% - 57% rms	Peak Factor @ 100% rms
	3	1
190	Peak Factor 0% - 60% rms	Peak Factor @ 100% rms
	3	2
250	Peak Factor 0% - 80% rms	Peak Factor @ 100% rms
	3	2.5

U6	Peak factor @ 0 - 100% rms	
075	5	
095	Peak Factor @ 100% rms	
	4.5	
115	Peak Factor 0% - 84% rms	Peak Factor @ 100% rms
	4	3.5
142	Peak Factor 0% - 57% rms	Peak Factor @ 100% rms
	4	2.5
190	N/A	
250	N/A	

Unimotor fm peak torque graph

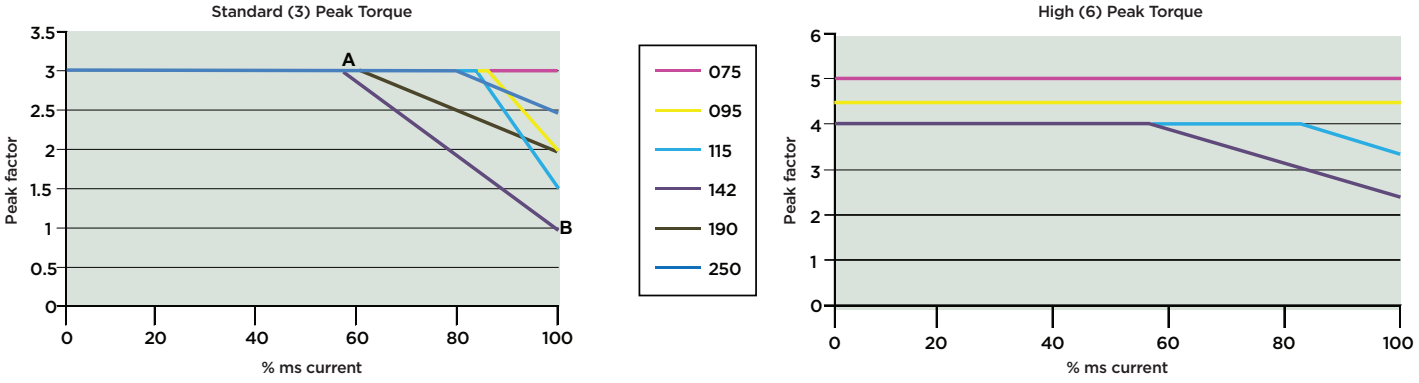

Peak torque is defined for a maximum period of 250ms, rms 3,000 rpm Δmax = 100 °C, 40 °C ambient.

To use the graph correctly, you will need to calculate the rms current and rms speed of the application. The rms current value must be converted into a percentage of the full motor current. For example, if the full current available is 10A and the rms current is 7.5A, then the percentage rms current value is 75%. Plot this value onto the graph to obtain the peak factor. The peak factor is then used to calculate the peak torque value using the table to the right.

Peak factor x Stall current x Kt = Peak torque
An example would be with a 142U3E300 motor, where the % rms current value is calculated to 50%, the peak factor would be 3. (Point A)
Peak factor x Stall current x Kt = Peak torque
3.00 x 15.6 x 1.6 = 74.9 Nm
But if the % rms current were to be calculated at a level of 100%, the peak factor would equal 1.00. (Point B)
Peak factor x Stall current x Kt = Peak torque
1.00 x 15.6 x 1.6 = 25 Nm

1.5 DIMENSIONS

1.5.1 Frame size 075

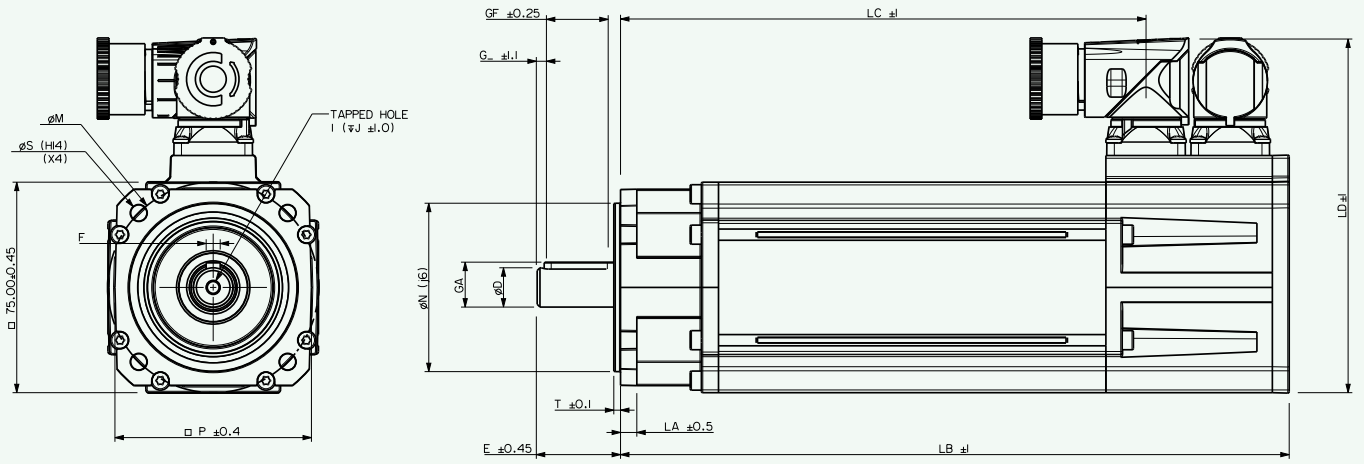

Motor dimensions (mm) Note all dimensions shown are at nominal

	Unbraked length		Braked length		Flange thickness	Register length	Register diameter	Flange square	Fixing hole diameter	Fixing hole PCD	Mounting bolts
	LB (± 1)	LC (± 1)	LB (± 1)	LC (± 1)	LA (± 0.5)	T (± 0.1)	N (j6)	P (± 0.4)	S (H14)	M	
075A	208.2	157.2	238.2	187.2	5.8	2.4	60.0	70.0	5.8	75.0	M5
075B	238.2	187.2	268.2	217.2							
075C	268.2	217.2	298.2	247.2							
075D	298.2	247.2	328.2	277.2							

Optional flange motor dimensions (mm)

	Unbraked length		Braked length	
	LB (± 1)	LC (± 1)	LB (± 1)	LC (± 1)
075A	192.6	141.6	222.6	171.6
075B	222.6	171.6	252.6	201.6
075C	252.6	201.6	282.6	231.6
075D	282.6	231.6	312.6	261.6

Optional flange dimensions (mm)

PCD code	Front end frame type	Flange square	Fixing hole PCD	Register diameter	Flange thickness	Fixing hole diameter
		P (± 0.4)	M (± 0.4)	N (j6)	LA (± 0.5)	S (H14)
075	Extended	70.0	66.7 - 75.0	60.0	5.8	5.80
080	Extended	70.0	75.0 - 80.0	60.0	5.8	5.80
085	Flat	80.0	85.0	70.0	5.8	7.00

Optional connector height (mm)

Connection type	Overall height
	LD (± 1.0)
A	118.5
C	126.0
V	118.5

Output shaft dimensions (mm)

	Shaft diameter	Shaft length	Key height	Key length	Key to shaft end	Key width	Tapped hole thread size	Tapped hole depth
	D (j6)	E (±0.45)	GA	GF (±0.25)	G (±1.1)	F	I	J (±0.4)
075A	11.0	23.0	12.5	14.0	3.6	4.0	M4x0.7	11
075B-D (Std)	14.0	30.0	16.0	25.0	1.5	5.0	M5x0.8	13.5
075A-D (Opt)	19.0	40.0	21.5	32.0	3.6	6.0	M6x1.0	17.0

Note: Shaft options below the standard (Std) dimensions will require customer approval and may not be covered by warranty.

1.5.2 Frame size 095

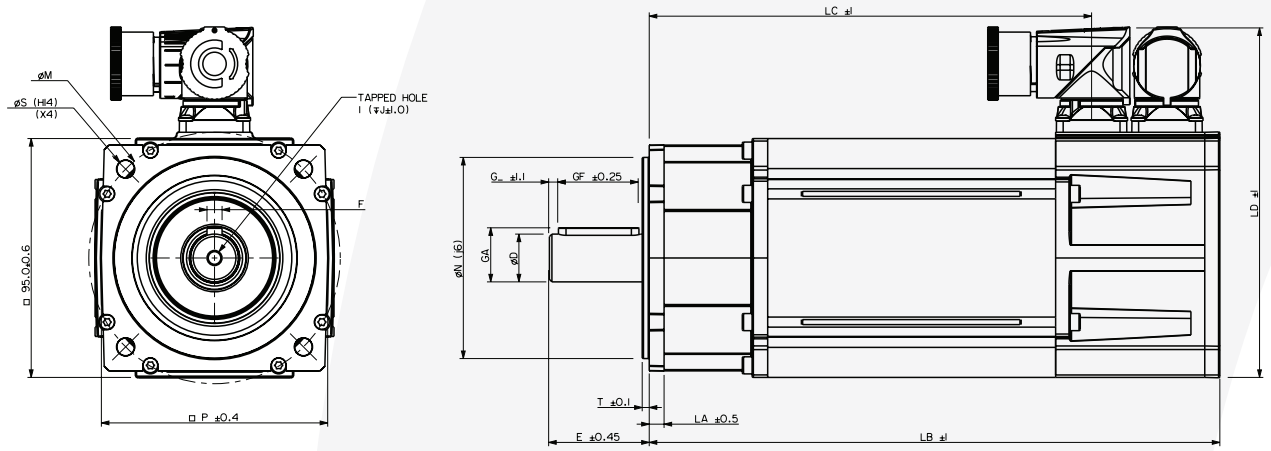

Motor dimensions (mm) Note all dimensions shown are at nominal

	Unbraked length		Braked length		Flange thickness	Register length	Register diameter	Flange square	Fixing hole diameter	Fixing hole PCD	Mounting bolts
	LB (± 1)	LC (± 1)	LB (± 1)	LC (± 1)	LA (± 0.5)	T (± 0.1)	N (j6)	P (± 0.4)	S (H14)	M (± 0.4)	
095A	226.9	175.9	256.9	205.9	5.9	2.8	80.0	90.0	7.0	100.0	M6
095B	256.9	205.9	286.9	235.9							
095C	286.9	235.9	316.9	265.9							
095D	316.9	265.9	346.9	295.9							
095E	346.9	295.9	376.9	325.9							

Optional flange motor dimensions (mm)

	Unbraked length		Braked length	
	LB (± 1)	LC (± 1)	LB (± 1)	LC (± 1)
095A	201.8	150.8	231.8	180.8
095B	231.8	180.8	261.8	210.8
095C	261.8	210.8	291.8	240.8
095D	291.8	240.8	321.8	270.8
095E	321.8	270.8	351.8	300.8

Optional flange dimensions (mm)

PCD code	Front end frame type	Flange square	Fixing hole PCD	Register diameter	Flange thickness	Fixing hole diameter
		P (± 0.4)	M (± 0.4)	N (j6)	LA (± 0.5)	S (H14)
098	Extended	90.0	98.4	73.0	5.9	7.0
115.0	Flat	105.0	115.0	95.0	6.8	10.0

Optional connector height (mm)

Connection type	Overall height
	LD (± 1)
A	131.5
C	139.0
V	131.5

Output shaft dimensions (mm)

	Shaft diameter	Shaft length	Key height	Key length	Key to shaft end	Key width	Tapped hole thread size	Tapped hole depth
	D (j6)	E (±0.45)	GA	GF (±0.25)	G (±1.1)	F	I	J (±0.4)
095 A (Std)	14.0	30.0	16.0	25.0	1.5	5.0	M5x0.8	13.5
095 B-E (Std)	19.0	40.0	21.5	32.0	3.6	6.0	M6x1.0	17.0
095 A-E (Opt)	22.0	50.0	24.5	40.0	4.6	6.0	M8x1.25	20.0

Note: Shaft options below the standard (Std) dimensions will require customer approval and may not be covered by warranty.

1.5.3 Frame size 115

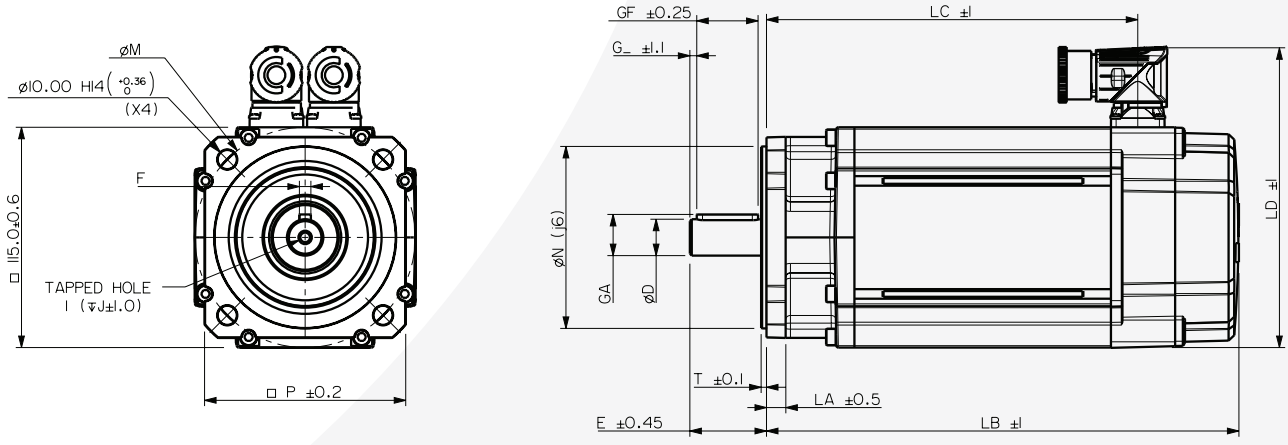

Motor dimensions (mm) Note all dimensions shown are at nominal

	Unbraked length		Braked length		Flange thickness	Register length	Register diameter	Flange square	Fixing hole diameter	Fixing hole PCD	Mounting bolts
	LB* (± 1)	LC (± 1)	LB* (± 1)	LC (± 1)	LA (± 0.5)	T (± 0.1)	N (j6)	P (± 0.4)	S (H14)	M (± 0.4)	
115A	246.6	193.8	276.6	223.8	10.1	2.8	95.0	105.0	10.0	115.0	M8
115B	276.6	223.8	306.6	253.8							
115C	306.6	253.8	336.6	283.8							
115D	336.6	283.8	366.6	313.8							
115E	366.6	313.8	396.6	343.8							

Optional flange motor dimensions (mm)

	Unbraked length		Braked length	
	LB* (± 1)	LC (± 1)	LB* (± 1)	LC (± 1)
115A	213.9	161.1	243.9	191.1
115B	243.9	191.1	273.9	221.1
115C	273.9	221.1	303.9	251.1
115D	303.9	251.1	333.9	281.1
115E	333.9	281.1	363.9	311.1

Optional flange dimensions (mm)

PCD code	Front end frame type	Flange square	Fixing hole PCD	Register diameter	Flange thickness	Fixing hole diameter
		P (± 0.4)	M (± 0.4)	N (j6)	LA (± 0.5)	S (H14)
130.0	Flat	116.0	130.0	110.0	13.2	10.0

Optional connector height (mm)

Connection type	Overall height
	LD (± 1)
A	149.0
C	156.5
V	149.0

Output shaft dimensions (mm)

	Shaft diameter	Shaft length	Key height	Key length	Key to shaft end	Key width	Tapped hole thread size	Tapped hole depth
	D (j6)	E (±0.45)	GA	GF (±0.25)	G (±1.1)	F	I	J (±0.4)
115 A-C (Std)	19.0	40.0	21.5	32.0	3.6	6.0	M6x1.0	17.0
115 D-E (Std)	24.0	50.0	27.0	40.0	4.6	8.0	M8x1.25	20.0

Note: Shaft options below the standard (Std) dimensions will require customer approval and may not be covered by warranty.

* For EC/FC encoders reduce LB length by 13mm. For AE resolvers reduce LB length by 23mm.

1.5.4 Frame size 142

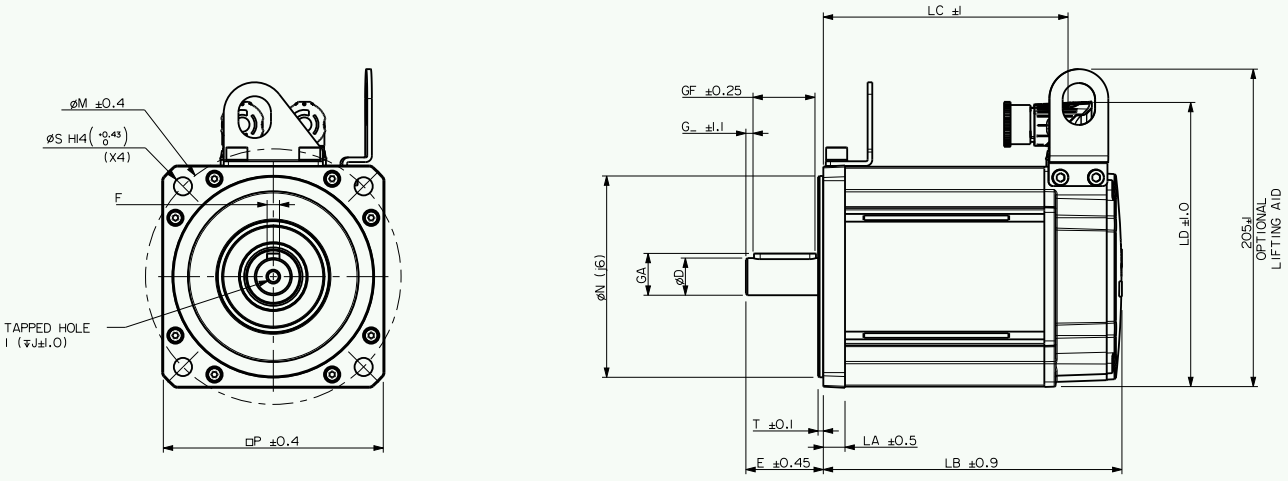

Motor dimensions (mm) Note all dimensions shown are at nominal

	Unbraked length		Braked length		Flange thickness	Register length	Register diameter	Flange square	Fixing hole diameter	Fixing hole PCD	Mounting bolts
	LB (± 1)	LC (± 1)	LB (± 1)	LC (± 1)	LA (± 0.5)	T (± 0.1)	N (j6)	P (± 0.4)	S (H14)	M (± 0.4)	
142A	192.8	158.0	252.8	218.0	14.0	3.4	130.0	142.0	12.0	165.0	M10
142B	222.8	188.0	282.8	248.0							
142C	252.8	218.0	312.8	278.0							
142D	282.8	248.0	342.8	308.0							
142E	312.8	278.0	372.8	338.0							

Optional flange motor dimensions (mm)

	Unbraked length		Braked length	
	LB (± 1)	LC (± 0.9)	LB (± 0.9)	LC (± 1)
142A	241.8	207.0	301.8	267.0
142B	271.8	237.0	331.8	397.0
142C	301.8	267.0	361.8	327.0
142D	331.8	397.0	391.8	357.0
142E	361.8	327.0	421.8	387.0

Optional flange dimensions (mm)

PCD code	Front end frame type	Flange square	Fixing hole PCD	Register diameter	Flange thickness	Fixing hole diameter
		P (± 0.4)	M (± 0.4)	N (j6)	LA (± 0.5)	S (H14)
149.0	Extended	140.0	149.2	114.3	11.5	12.0

Optional connector height (mm)

Connection type	Height	Connector type	Height
	LD (± 1)		LD (± 1)
A	176.0	J	204.5
C	183.5	M	184.0
V	176.0		

Output shaft dimensions (mm)

	Shaft diameter	Shaft length	Key height	Key length	Key to shaft end	Key width	Tapped hole thread size	Tapped hole depth
	D (j6)	E (±0.45)	GA	GF (±0.25)	G (±1.1)	F	I	J (±0.4)
142 A-E (Opt)	22.0	50.0	24.5	40.0	4.6	6.0	M8x1.25	20.0
142 A-E (Std)	24.0	50.0	27.0	40.0	4.6	8.0	M8x1.25	20.0
142 A-E (Opt)	28.0	60.0	31.0	50.0	4.6	8.0	M10x1.5	23.0
142 A-E (Opt)	32.0	58.0	35.0	50.0	4.6	10.0	M12x1.75	29.0

Note: Shaft options below the standard (Std) dimensions will require customer approval and may not be covered by warranty.

Lifting brackets fitted if required.

1.5.5 Frame size 190

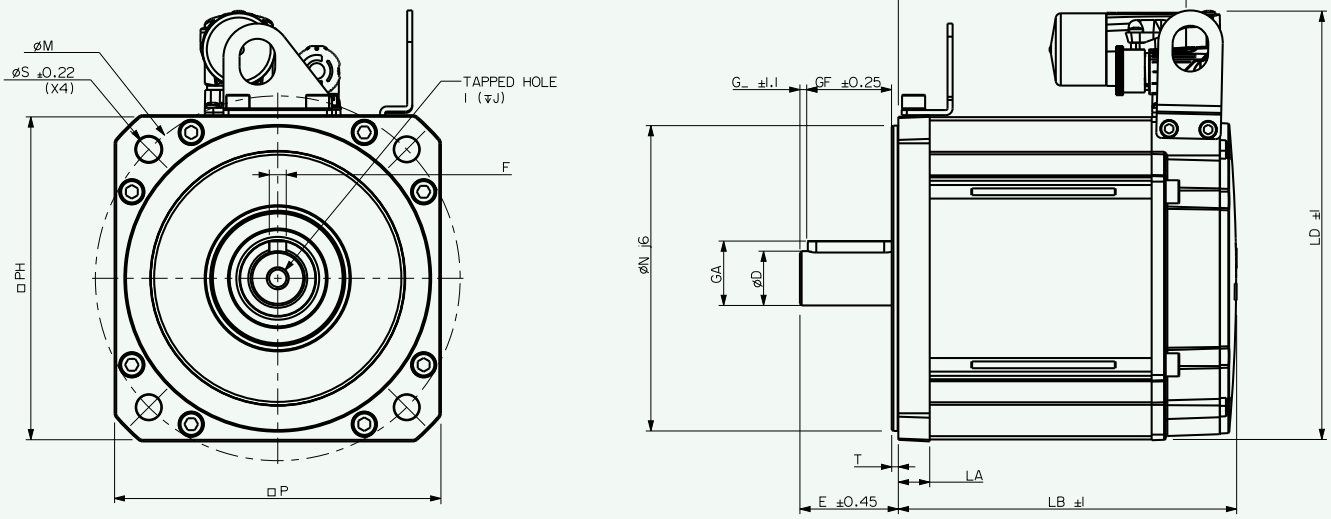

Motor dimensions (mm) Note all dimensions shown are at nominal

	Unbraked length		Braked length		Flange thickness	Register length	Register diameter	Flange square	Fixing hole diameter	Fixing hole PCD	Mounting bolts
	LB (± 1)	LC (± 1)	LB (± 1)	LC (± 1)	LA (± 0.5)	T (± 0.1)	N (j6)	P (± 0.4)	S (H14)	M (± 0.4)	
190A	199.4	169.6	289.4	259.6	18.5	3.9	180.0	190.3	14.5	215.0	M12
190B	229.4	199.6	319.4	289.6							
190C	259.4	229.6	349.4	319.6							
190D	289.4	259.6	379.4	349.6							
190E	319.4	289.6	409.4	379.6							
190F	349.4	319.6	439.4	409.6							
190G	379.4	349.6	469.4	439.6							
190H	409.4	379.6	499.4	469.6							

Output shaft dimensions (mm)

	Shaft diameter	Shaft length	Key height	Key length	Key to shaft end	Key width	Tapped hole thread size	Tapped hole depth
	D (j6)	E (±0.45)	GA	GF (±0.25)	G (±1.1)	F	I	J (±0.4)
190 A-H (Opt)	28.0	60.0	31.0	50.0	4.6	8.0	M10x1.5	23.0
190 A-H (Std)	32.0	58.0	35.0	50.0	4.6	10.0	M12x1.75	29.0
190 A-H (Opt)	38.0	58.0	41.0	50.0	4.6	10.0	M12x1.75	29.0
190 A-H (Opt)	42.0	110.0	45.0	100.0	4.6	12.0	M16x2.0	37.0

Note: Shaft options below the standard (Std) dimensions will require customer approval and may not be covered by warranty.

Optional connector height (mm)

Connection type	Overall height
	LD (± 1)
M	232.0
N	252.5
H (<40 Amp)	287.0
H (<60 Amp)	323.0

1.5.6 Frame size 250

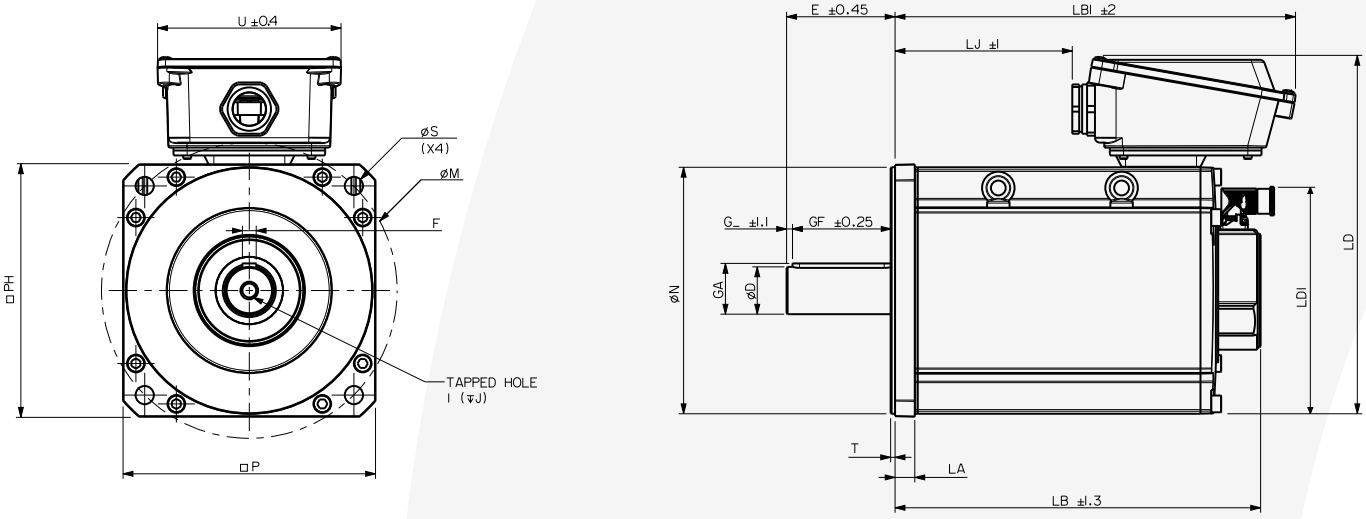

Motor dimensions (mm) Note: all dimensions shown are at nominal

	Motor Length			Flange thickness	Register length	Register diameter	Overall height	Flange square	Fixing hole diameter	Fixing hole PCD	Motor housing	Hybrid box width	Signal connector height	Mounting bolts
	LB (± 1.3)	LB1 (± 2.0)	LJ (± 1.0)	LA (± 0.1)	T (± 0.1)	N (j6)	LD (± 1.0)	P (± 0.6)	S (H14)	M (± 0.4)	PH (± 1.0)	U (± 0.4)	LD1 (± 1.0)	
Unbraked motor														
250D	375.7	406.1	179.7											
250E	405.7	436.1	209.7											
250F	435.7	466.1	239.7	20.0	4.5	250.0	363.5	256.0	18.5	300.0	250.0	186.0	228.5	M16
Braked motor														
250D	447.5	477.9	251.5											
250E	477.5	507.9	281.5											
250F	507.5	537.9	311.5											

Note: For Heidenhain feedback devices please add 15mm to LB length

Output shaft dimensions (mm)

	Shaft diameter	Shaft length	Key height	Key length	Key to shaft end	Key width	Tapped hole thread size	Tapped hole depth
	D (j6)	E (±0.45)	GA (IEC 72-1)	GF (±0.25)	G (±1.1)	F (H9)	I	J (±1.0)
38.0 (Opt)	38.0	80.0	41.0	70.0	4.6	10.0	M12x1.75	29.0
42.0 (Opt)	42.0	110.0	45.0	100.0	6.0	12.0	M16x2.0	37.0
48.0 D-F (Std)	48.0	110.0	51.5	100.0	6.0	14.0	M16x2.0	37.0

Note: Shaft options below the standard (Std) dimensions will require customer approval and may not be covered by warranty.

Optional connector height (mm)

Connection type	Overall height	Signal overall height
	LD (± 1)	LD1 (± 1)
M	291.5	221.0
N	312.5	221.0
J	312.5	221.0

2 Introduction to Unimotor hd

2.1 Unimotor hd is a high dynamic brushless AC servo motor range designed for use in pulse duty applications where rapid acceleration and deceleration are required. The motors are available in frame sizes from 055 to 190.

2.1.1 Custom built motors

As part of our commitment to you, we can design special products to meet your application specific requirements.

Custom built motors are identified by the code -S*** added to the end of the part number and can include custom shafts, connections or coatings.

e.g. SPZ - Motor is left unpainted
SON - Motor is fully painted

2.1.2 Wide range of accessories

In addition we offer a range of accessories to cover your system requirements:

- Feedback and power cables for static and dynamic applications
- Gearboxes
- Cable connectors

2.1.3 Reliability and innovation

Unimotor hd is designed using a proven development process that prioritizes innovation and reliability. This process has resulted in a market leading reputation for both performance and quality.

2.1.4 Accuracy and resolution to suit your application requirements

Choosing the right feedback device for your application is critical in getting optimum performance. Unimotor hd has a range of feedback options that offer different levels of accuracy and resolution to suit most applications:

- Resolver: robust for extreme applications and conditions – low accuracy, medium resolution
- Incremental encoder: high accuracy, medium resolution
- Inductive/capacitive SinCos/Absolute: medium accuracy, high resolution
- Optical/SinCos/Absolute: high accuracy, high resolution
- Single turn and multi-turn: Hiperface and EnDat protocols supported.

2.1.5 Matched motor and drive combinations

Control Techniques offer drive and motor combinations that provide an optimized system in terms of ratings, performance, cost and ease of use.

Unimotor hd motors fitted with high resolution SinCos or Absolute encoders are pre-loaded with the motor "electronic nameplate" data during the manufacturing process. This data can be read by any of our servo drives and used to automatically optimize the drive settings.

This feature simplifies commissioning and maintenance, ensures consistent performance and saves time.

2.1.6 Features

Unimotor hd is suitable for a wide range of industrial applications, due to it's extensive range of features:

- Torque range from 0.72 Nm to 85 Nm
- High energy dissipation parking brakes
- High torque to inertia ratio for high dynamic performance
- Compact but powerful
- IP65 conformance; sealed against water spray and dust when mounted and connected
- Segmented stator design
- World class performance
- Winding voltages for inverter supply of 400 V and 220 V
- Rated speeds from 1,000 to 6,000 rpm
- Thermal protection by PTC thermistor/ optional KTY84.130 sensor
- Larger shafts to increase torsional rigidity
- Supported by rigorous testing for performance and reliability.

Unimotor hd

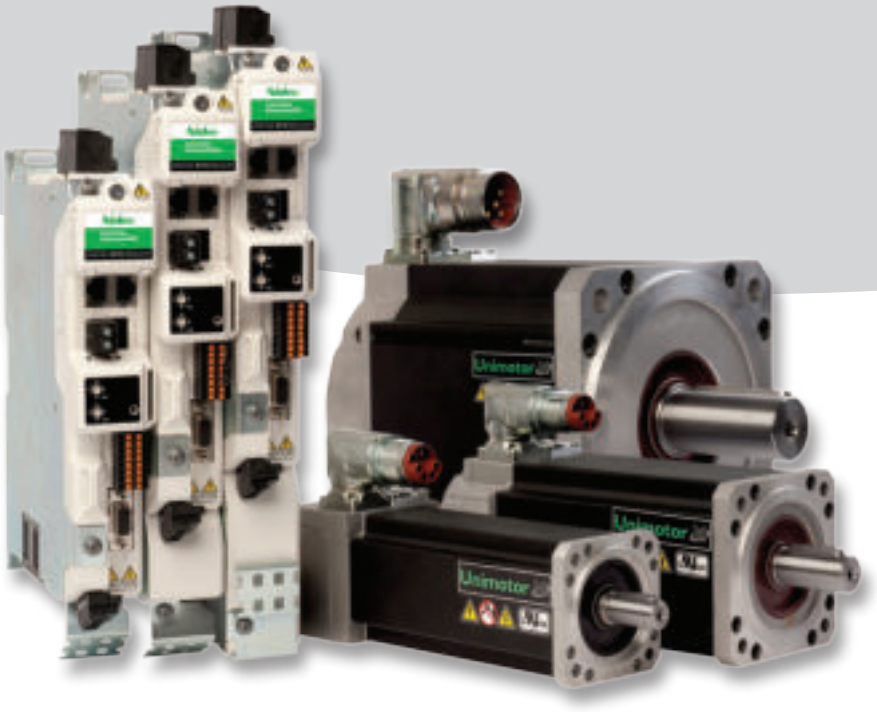

2.1.7 Quick reference table

Frame size	PCD (mm)	Unimotor hd										
055	063		0.72 1.65 0.14 0.36									
067	075			1.45 3.70 0.30 0.75								
089	100				3.20 8.00 0.87 2.34							
115	130					5.8 18.8 2.42 8.38						
142	165						10.0 38.0 6.50 27.2					
190	215										52.0 85.0 54.6 103.5	
Stall	(Nm) 0	0.5	1.0	2.0	5.0	8.0	10.0	15.0	20.0	30.0	60.0	85.0
Inertia	(kg.cm2) 0	0.1	0.2	0.7	1.5	2.5	6.5	8.0	9.0	20.0	60.0	103.5

2.1.8 Conformance and standards

RoHS Compliant

2.2 ORDERING INFORMATION

2.2.1 UNIMOTOR HD - D + 10 LEAD TIME

Use the information below in the illustration to create an order code for a Unimotor hd.

089	UD	B	30	0	B
Frame size	**Motor voltage**	**Stator length**	**Rated speed**	**Brake**	**Connection type**
	055 – 115 frame	**055 frame**	**055 – 142 frame**	**055 – 142 frame**	**Size 1**
055		**A – B**	***20** = 2000 rpm	**0** = Not fitted (Std)	**B** = Power and signal 90° rotatable
067		**067 frame**	**30** = 3000 rpm	**5** = Parking brake (fibre)[1]	
089		**A**	* 115UDD20 only	**6** = Parking brake (resin)[2]	
115	**ED** = 220 V	**089 frame**		[1]5 brake available only on 055 & 142 frames	
142		**C**		[2]6 brake available only on 067, 089 & 115 frames	
		115 frame			
		B			
	055 – 142 frame	**055 frame**			
		A – C		**Express availability motors, available in ten days ex works**	
		067 frame			
		B			
		089 frame			
	UD = 400 V	**B – C**			
		115 frame			
		B – D			
		142 frame			
		C			

2.2.2 UNIMOTOR HD – STANDARD LEAD TIME

Additonal options are available upon request but may require a longer lead time to complete, please check with the Drive Centre.

067	UD	B	30	0	B
Frame size	**Motor voltage**	**Stator length**	**Rated speed***	**Brake**	**Connection type****
		055 frame	**055 – 067 frame**	**055 – 190 frame**	**Size 1**
055	**ED** = 220V	**A – C**	**30** = 3000 rpm	**0** = Not fitted (Std)	**B** = Power and signal 90° rotatable
067	**UD** = 400V	**067 frame**	**60** = 6000 rpm	**5** = Parking brake (fibre)	
089		**A – C**	**089 frame**	**6** = Parking brake (resin)[3]	**D** = Single cable, power & signal combined, 90° rotatable
115		**089 frame**	**30** = 3000 rpm	**X** = Special	
142		**A – C**	**40** = 4000 rpm	[3]6 brake not available on 055 & 190 frames	**Size 1.5**
190		**115 frame**	**60** = 6000 rpm		**J** = Power and signal 90° rotatable
		B – D	**115 frame**		
		142 frame	**20 =** 2000 rpm		**E** = Single cable, power & signal combined, 90° rotatable
		C – E	**30** = 3000 rpm		
		190 frame	**142 frame**		
		C / D / F	**10** = 1000 rpm		
			15 = 1500 rpm		
			20 = 2000 rpm		
			30 = 3000 rpm		
			190 frame		
			10 = 1000 rpm		
			15 = 1500 rpm		
			20 = 2000 rpm		

*** Not all speeds are available on all motors**

**** Single cable only must be fitted with KTY thermistor and is only available with certain feedback options. Please check before ordering.**

A	CA		A		
Output shaft	**Feedback device**		**Inertia**	**PCD**	**Shaft Diameter**
055 – 142 frame	**055 – 067 frame**		**055 – 142 frame**	**055 frame**	**055 frame**
A = Key	**AR** = Resolver		**A** = Standard + PTC Thermistor	**063** = Standard	**110** = 11mm
F = Key and half key supplied separately[4]	**CR** = Incremental Encoder	R35i			**140** = 14mm
	EM = Inductive EnDat SinCos Multi-turn	EQI 1130			
	089 – 142 frame				
	AE = Resolver				
	CA = Incremental Encoder	CFS50			
	EC = Inductive EnDat SinCos Multi-turn	EQI 1331			
	EB = Optical EnDat SinCos Single-turn	EQN 1325			
	RA = Optical Hiperface SinCos Multi-turn	SRM 50			

• PCD & Shaft code also required to order standard motor

A	CA		A
Output shaft	**Feedback device**		**Inertia**
055 – 190 frame	**055 – 067 frame**		**055 – 190 frame**
A = Key	**AR** = Resolver		**A** = Standard + PTC Thermistor
B = Plain shaft	**CR** = Incremental Encoder	R35i	**C** = Standard + KTY Thermistor
E = Key with half key fitted[4]	**EM** = Inductive EnDat SinCos Multi-turn	EQI 1130	**E** = Standard + PTC Thermistor + Lifting brackets
F = Key and half key supplied separately[4]	**FM** = Inductive EnDat SinCos Single-turn	ECI 1118	
	TL = Optical Hiperface SinCos Multi-turn	SKM 36	
	UL = Optical Hiperface SinCos Single-turn	SKS 36	
	EN = Optical EnDat Multi-turn Size 36	EQN 1135	
	FN = Optical EnDat Single-turn Size 36	ECN 1123	
	EG = Inductive EnDat Multi-turn	EQI 1131	
	FG = Inductive EnDat Single-turn	ECI 1119	
	XX = Specials		

089 – 190 frame			
AE = Resolver		**RA** = Optical Hiperface SinCos Multi-turn	SRM 50
CA = Incremental Encoder	CFS50	**SA** = Optical Hiperface SinCos Single-turn	SRS 50
EC = Inductive EnDat SinCos Multi-turn	EQI 1331	**EB** = Optical EnDat SinCos Multi-turn	EQN 1325
FC = Inductive EnDat SinCos Single-turn	ECI 1319	**FB** = Optical EnDat SinCos Single-turn	ECN 1313
EF = Inductive EnDat Multi-turn FS	EQI 1331FS	**GB** = ROHS EnDat Multi-turn Size 58	EQN 1337
FF = Inductive EnDat Single-turn FS	ECI 1319FS	**HB** = ROHS EnDat Single-turn Size 58	ECN 1325

[4]not available on 055 frame

* other feedback options are available on request but may increase the motor lead time. Please check before ordering.

2.3 DIMENSIONS & RATINGS

2.3.1 Frame size 055

Motor frame size (mm)		055ED			055UD		
Voltage (Vrms)		200-240			380-480		
Frame length		A	B	C	A	B	C
Continuous stall torque (Nm)		0.72	1.18	1.65	0.72	1.18	1.65
Peak torque (Nm)		2.88	4.72	6.60	2.88	4.72	6.60
Standard inertia (kg cm²)		0.14	0.25	0.36	0.14	0.25	0.36
Winding thermal time constant (sec)		34	38	42	34	38	42
Standard motor weight (kg)		1.20	1.50	1.80	1.20	1.50	1.80
Number of poles		8	8	8	8	8	8
Speed 3000 (rpm)	Kt (Nm/A) =	0.74	0.87	0.91	0.74	1.49	1.65
	Ke (V/krpm) =	45	52.5	55	45	90	100
Rated torque (Nm)		0.70	1.05	1.48	0.70	1.05	1.48
Stall current (A)		0.97	1.36	1.81	0.97	0.79	1.00
Rated power (kW)		0.22	0.33	0.46	0.22	0.33	0.46
R (ph-ph) (Ohms)		28	14.12	9.53	28	45	31
L (ph-ph) (mH)		50	32	23	50	100	75
Recommended power conn' size		1	1	1	1	1	1
Speed 6000 (rpm)	Kt (Nm/A) =	0.45	0.43	0.48	0.74	0.79	0.83
	Ke (V/krpm) =	27	26	29	45	47.50	50
Rated torque (Nm)		0.68	0.9	1.2	0.68	0.9	1.2
Stall current (A)		1.61	2.74	3.44	0.97	1.49	1.99
Rated power (kW)		0.43	0.57	0.75	0.43	0.57	0.75
R (ph-ph) (Ohms)		8.5	3.55	2.38	28	10.7	7.8
L (ph-ph) (mH)		16	8.2	6.3	50	25	20
Recommended power conn' size		1	1	1	1	1	1

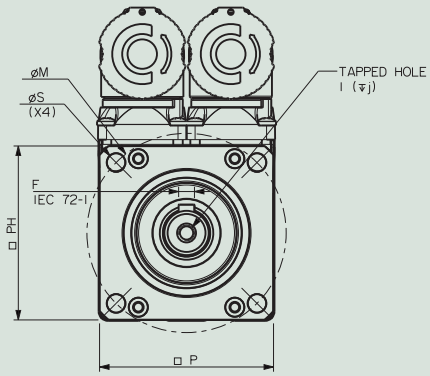

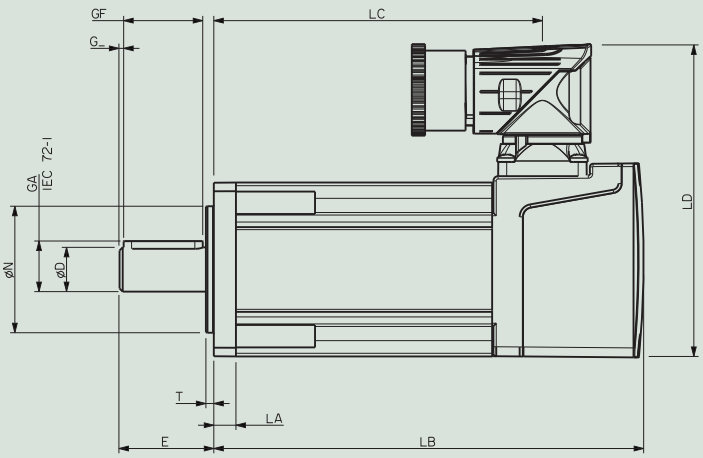

Δt= 100°C winding 40°C maximum ambient
All data subject to +/-10% tolerance
Stall torque, rated torque and power relate to maximum continuous operation tested in a 20°C ambient at **12 kHz drive switching frequency**
All other figures relate to a 20°C motor temperature.
Maximum intermittent winding temperature is 140°C

Motor dimension (mm)

	Feedback AR, CR, EM, FM				Flange thickness	Register length	Register diameter	Overall height	Flange square	Fixing hole diameter	Fixing hole PCD	Motor housing	Mounting bolts
	Unbraked length		Braked length										
	LB (±0.9)	LC (±1.0)	LB (±0.9)	LC (±1.0)	LA (±0.5)	T (±0.1)	N (j6)	LD (±0.3)	P (±0.3)	S (H14)	M (±0.5)	PH (±0.5)	
055A	118.0	90.0	158.0	130.0	7.0	2.5	40.0	99.0	55.0	5.8	63.0	55.0	M5
055B	142.0	114.0	182.0	154.0									
055C	166.0	138.0	206.0	178.0									

Shaft dimensions (mm)

	Shaft diameter	Shaft length	Key height	Key length	Key to shaft end	Key width	Tapped hole thread size	Tapped hole depth
	D (j6)	E	GA	GF	G	F (h9)	I	J (±1)
14.0 Std	14	30.0	16.0	25.0	1.5	5.0	M5	12.5

2.3.2 Frame size 067

Motor frame size (mm)		067ED			067UD		
Voltage (Vrms)		200-240			380-480		
Frame length		A	B	C	A	B	C
Continuous stall torque (Nm)		1.45	2.55	3.70	1.44	2.55	3.7
Peak torque (Nm)		4.35	7.65	11.10	4.35	7.65	11.1
Standard inertia (kg cm²)		0.30	0.53	0.75	0.3	0.53	0.75
Winding thermal time constant (sec)		54.0	61.0	65.0	54	61.0	65.0
Standard motor weight (kg)		1.96	2.56	3.16	1.96	2.56	3.16
Number of poles		10	10	10	10	10	10
Speed 3000 (rpm)	Kt (Nm/A) = Ke (V/krpm) =	0.93 57			0.8 49	1.6 98	
Rated torque (Nm)		1.4	2.45	3.5	1.4	2.45	3.5
Stall current (A)		1.56	2.74	3.98	1.81	1.59	2.31
Rated power (kW)		0.44	0.77	1.1	0.44	0.77	1.1
R (ph-ph) (Ohms)		14.92	4.88	3.33	11.69	15.2	10.7
L (ph-ph) (mH)		45.4	17.4	12.7	35.2	54.2	40.8
Recommended power conn' size		1	1	1	1	1	1
Speed 6000 (rpm)	Kt (Nm/A) = Ke (V/krpm) =	0.47 28.5			0.8 49		
Rated torque (Nm)		1.3	2.2	♦	1.3	2.2	3.1
Stall current (A)		3.09	5.43	♦	1.81	3.19	4.63
Rated power (kW)		0.82	1.38	♦	0.82	1.38	1.95
R (ph-ph) (Ohms)		3.86	1.22	♦	11.69	3.79	2.68
L (ph-ph) (mH)		11.1	4.4	♦	35.2	13.6	10.2
Recommended power conn' size		1	1	♦	1	1	1

♦ *not available*

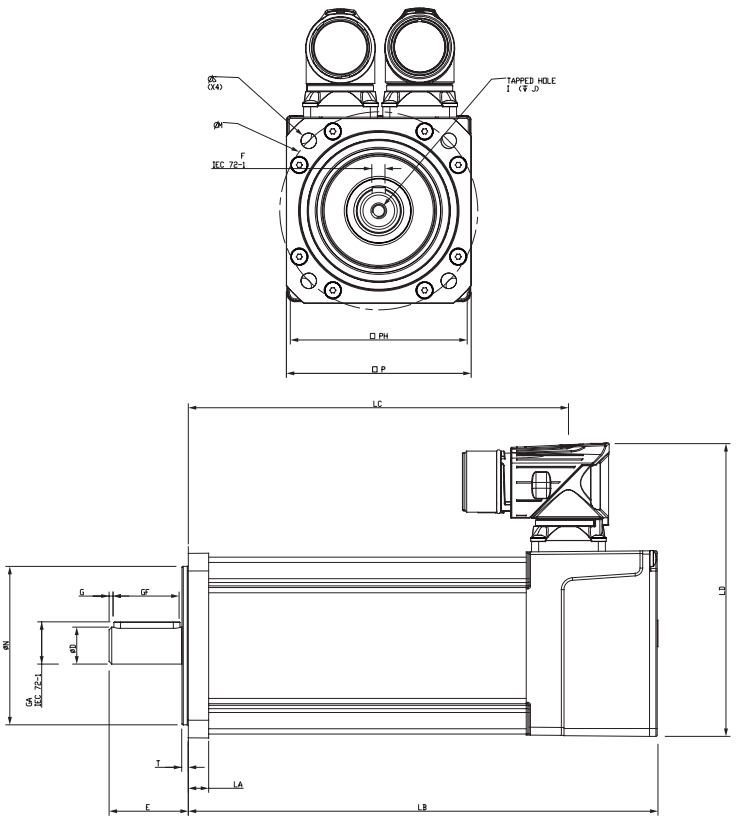

Δt= 100°C winding 40°C maximum ambient
All data subject to +/-10% tolerance
Stall torque, rated torque and power relate to maximum continuous operation tested in a 20°C ambient at **12kHz drive switching frequency**
All other figures relate to a 20°C motor temperature.
Maximum intermittent winding temperature is 140°C

Motor dimension (mm)

	Feedback AR, CR, EM, FM				Flange thickness	Register length	Register diameter	Overall height	Flange square	Fixing hole diameter	Fixing hole PCD	Motor housing	Mounting bolts
	Unbraked length		Braked length										
	LB (± 0.9)	LC (± 1.0)	LB (± 0.9)	LC (± 1.0)	LA(± 0.5)	T(± 0.1)	N(j6)	LD(± 0.3)	P(± 0.3)	S(H14)	M(± 0.5)	PH(± 0.5)	
067A	142.9	109.0	177.9	144.0	7.7	2.5	60.0	111.5	70.0	5.8	75.0	67.00	M5
067B	172.9	139.0	207.9	174.0									
067C	202.9	169.0	237.9	204.0									

	Feedback TL, UL	
	Unbraked length	Braked length
	LB (± 0.9)	LB (± 0.9)
067A	157.4	192.4
067B	187.4	222.4
067C	217.4	252.4

Shaft dimensions (mm)

	Shaft diameter	Shaft length	Key height	Key length	Key to shaft end	Key width	Tapped hole thread size	Tapped hole depth
	D (j6)	E	GA	GF	G	F (h9)	I	J (± 1)
14.0 (Std)	14.0	30.0	16.0	25.0	1.5	5.0	M5 x 0.8	13.5

2.3.3 Frame size 089

Motor frame size (mm)		089ED			089UD		
Voltage (Vrms)		200-240			380-480		
Frame length		A	B	C	A	B	C
Continuous stall torque (Nm)		3.2	5.5	8.0	3.2	5.5	8.0
Peak torque (Nm)		9.6	16.5	24.0	9.6	16.5	24.0
Standard inertia (kg cm²)		0.87	1.61	2.34	0.87	1.61	2.34
Winding thermal time constant (sec)		85.0	93.0	98.0	85	93.0	98.0
Standard motor weight (kg)		3.18	4.28	5.38	3.18	4.28	5.38
Number of poles		10	10	10	10	10	10
Speed 3000 (rpm)	Kt (Nm/A) = Ke (V/krpm) =	0.93 57			1.6 98		
Rated torque (Nm)		3.0	4.85	6.9	3	4.85	6.9
Stall current (A)		3.44	5.91	8.6	2	3.44	5.0
Rated power (kW)		0.94	1.52	2.17	0.94	1.52	2.17
R (ph-ph) (Ohms)		3.28	1.57	0.89	10.1	5.05	2.68
L (ph-ph) (mH)		21.6	11.8	7.1	65.2	38.4	21.7
Recommended power conn' size		1	1	1	1	1	1
Speed 4000 (rpm)	Kt (Nm/A) = Ke (V/krpm) =	0.7 42.75			1.2 73.5		
Rated torque (Nm)		2.9	4.55	6.35	2.9	4.55	6.35
Stall current (A)		4.57	7.86	11.4	2.67	4.58	6.67
Rated power (kW)		1.21	1.91	2.66	1.21	1.91	2.66
R (ph-ph) (Ohms)		2.04	0.79	0.54	6.16	2.47	1.75
L (ph-ph) (mH)		13.2	6.0	4.4	39.8	18.8	14.0
Recommended power conn' size		1	1	1	1	1	1
Speed 6000 (rpm)	Kt (Nm/A) = Ke (V/krpm) =	0.47 28.5			0.8 49		
Rated torque (Nm)		2.65	3.8	5.0	2.65	3.8	5.0
Stall current (A)		6.81	11.7	17.02	4.0	6.88	10.0
Rated power (kW)		1.67	2.39	3.14	1.67	2.39	3.14
R (ph-ph) (Ohms)		0.98	0.39	0.23	2.52	1.27	0.83
L (ph-ph) (mH)		6.2	3.0	1.90	16.3	9.6	6.7
Recommended power conn' size		1	1	1	1	1	1

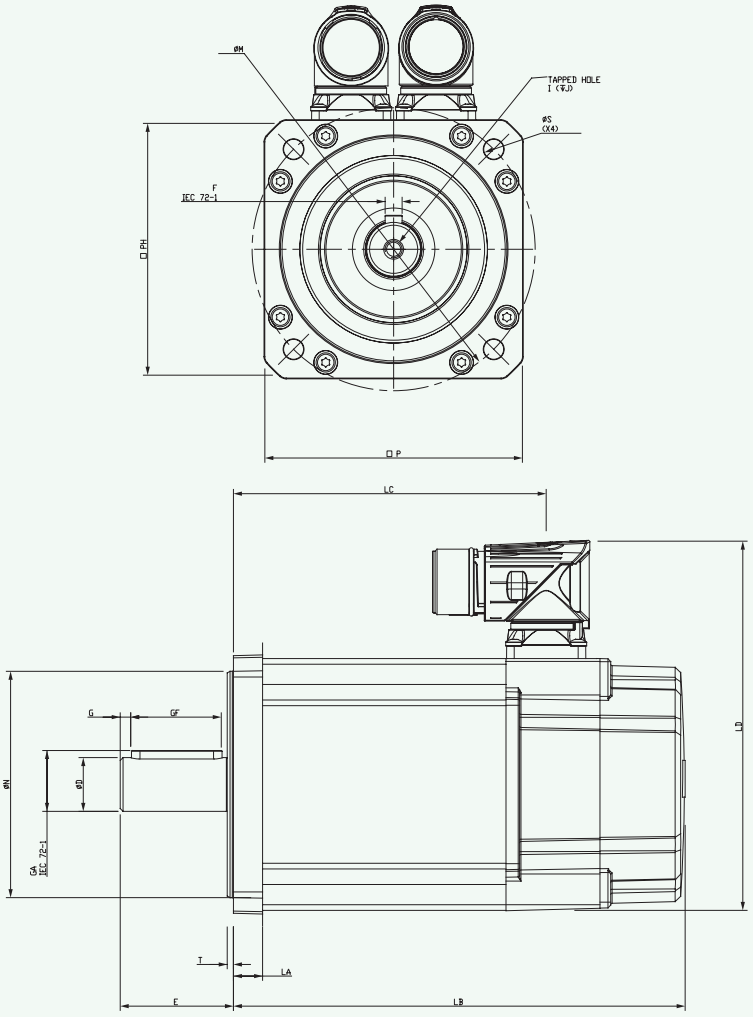

Δt= 100°C winding 40°C maximum ambient
All data subject to +/-10% tolerance
Stall torque, rated torque and power relate to maximum continuous operation tested in a 20°C ambient at **12kHz drive switching frequency**
All other figures relate to a 20°C motor temperature.
Maximum intermittent winding temperature is 140°C

Motor dimension (mm)

	Feedback EC, FC, EF, FF				Flange thickness	Register length	Register diameter	Overall height	Flange square	Fixing hole diameter	Fixing hole PCD	Motor housing	Mounting bolts
	Unbraked length		Braked length										
	LB (± 0.9)	LC (± 1.0)	LB (± 0.9)	LC (± 1.0)	LA(± 0.5)	T(± 0.1)	N(j6)	LD(± 0.3)	P(± 0.3)	S(H14)	M(± 0.5)	PH(± 0.5)	
089A	147.8	110.5	187.9	150.6	10.3	2.2	80.0	130.5	91.0	7.00	100.0	89.0	M6
089B	177.8	140.5	217.9	180.6									
089C	207.8	170.5	247.9	210.6									

	Feedback FB, EB, CA, SA, RA		Feedback AE	
	Unbraked length	Braked length	Unbraked length	Braked length
	LB (± 0.9)	LB (± 0.9)	LB (± 0.9)	LB (± 0.9)
089A	160.8	200.9	137.8	177.9
089B	190.8	230.9	167.8	207.9
089C	220.8	260.9	197.8	237.9

Shaft dimensions (mm)

	Shaft diameter	Shaft length	Key height	Key length	Key to shaft end	Key width	Tapped hole thread size	Tapped hole depth
	D (j6)	E	GA	GF	G	F (h9)	I	J (± 1)
19.0 Std	19.0	40.0	21.5	32.0	3.7	6.0	M6 x 1.0	17.0

2.3.4 Frame size 115

Motor frame size (mm)		115ED			115UD		
Voltage (Vrms)		200-240			380-480		
Frame length		B	C	D	B	C	D
Continuous stall torque (Nm)		10.2	14.6	18.8	10.2	14.6	18.8
Peak torque (Nm)		30.6	43.8	56.4	30.6	43.8	56.4
Standard inertia (kg cm²)		4.41	6.39	8.38	4.41	6.39	8.38
Winding thermal time constant (sec)		164.0	168.0	175.0	164	168.0	175.0
Standard motor weight (kg)		6.95	8.7	10.49	6.95	8.72	10.49
Number of poles		10	10	10	10	10	10
Speed 2000 (rpm)	Kt (Nm/A) = Ke (V/krpm) =	1.4 85.5			2.4 147		
Rated torque (Nm)		8.6	11.90	15.6	8.6	11.90	15.6
Stall current (A)		7.29	10.43	13.43	4.25	6.08	7.83
Rated power (kW)		1.80	2.49	3.27	1.8	2.49	3.27
R (ph-ph) (Ohms)		1.40	0.77	0.61	4.41	2.41	1.8
L (ph-ph) (mH)		12.8	7.9	6.6	40.6	24.7	19.5
Recommended power conn' size		1	1	1	1	1	1
Speed 3000 (rpm)	Kt (Nm/A) = Ke (V/krpm) =	0.93 57			1.6 98		
Rated torque (Nm)		7.7	10.5	♦	7.7	10.5	13.6
Stall current (A)		10.97	15.70	♦	6.38	9.13	11.75
Rated power (kW)		2.42	3.30	♦	2.42	3.3	4.27
R (ph-ph) (Ohms)		0.58	0.39	♦	1.83	1.21	0.78
L (ph-ph) (mH)		5.4	4.0	♦	16.9	12.7	8.7
Recommended power conn' size		1	1	♦	1	1	1

♦ *not available*

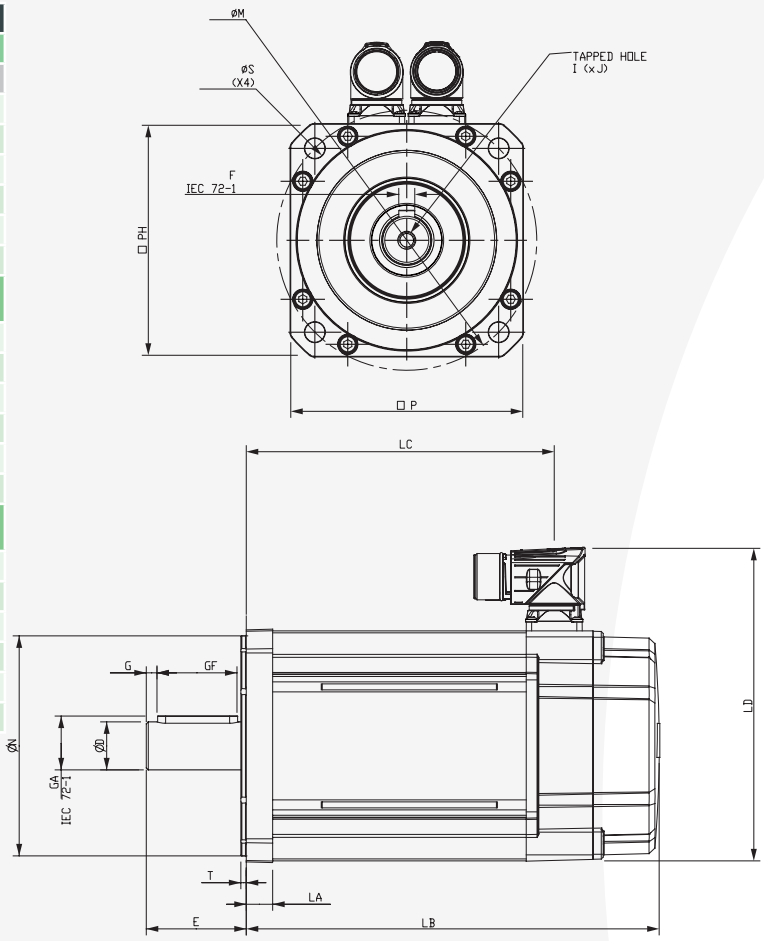

Δt= 100°C winding 40°C maximum ambient
All data subject to +/-10% tolerance
Stall torque, rated torque and power relate to maximum continuous operation tested in a 20°C ambient at **12kHz drive switching frequency**
All other figures relate to a 20°C motor temperature.
Maximum intermittent winding temperature is 140°C

Motor dimension (mm)

	Feedback EC, FC, EF, FF				Flange thickness	Register length	Register diameter	Overall height	Flange square	Fixing hole diameter	Fixing hole PCD	Motor housing	Mounting bolts
	Unbraked length		Braked length										
	LB (± 0.9)	LC (± 1.0)	LB (± 0.9)	LC (± 1.0)	LA(± 0.5)	T(± 0.1)	N(j6)	LD(± 0.3)	P(± 0.3)	S(H14)	M(± 0.5)	PH(± 0.5)	
115B	193.8	154.0	230.9	191.1	13.2	2.7	110.0	156.5	116.0	10.00	130.0	115.0	M8
115C	223.8	184.0	260.9	221.1									
115D	253.8	214.0	290.9	251.1									

	Feedback FB, EB, CA, SA, RA		Feedback AE	
	Unbraked length	Braked length	Unbraked length	Braked length
	LB (± 0.9)	LB (± 0.9)	LB (± 0.9)	LB (± 0.9)
115B	206.8	243.9	183.8	220.9
115C	236.8	273.9	213.8	250.9
115D	266.8	303.9	243.8	280.9

Shaft dimensions (mm)

	Shaft diameter	Shaft length	Key height	Key length	Key to shaft end	Key width	Tapped hole thread size	Tapped hole depth
	D (j6)	E	GA	GF	G	F (h9)	I	J (± 0.1)
24.0 Std	24.0	50.0	27.0	40.0	5.3	8.0	M8 x 1.25	20.0

2.3.5 Frame size 142

Motor frame size (mm)		142ED			142UD		
Voltage (Vrms)		200-240			380-480		
Frame length		C	D	E	C	D	E
Continuous stall torque (Nm)		25.0	31.5	38.0	25.0	31.5	38.0
Peak torque (Nm)		74.9	94.5	114.0	74.9	94.5	114.0
Standard inertia (kg cm²)		17.0	22.1	27.2	17.0	22.10	27.20
Winding thermal time constant (sec)		245.0	251.0	256.0	245.0	251.0	256.0
Standard motor weight (kg)		12.74	15.39	18.04	12.74	15.39	18.04
Number of poles		10	10	10	10	10	10
Speed 1000 (rpm)	Kt (Nm/A) = Ke (V/krpm) =	2.8 171					
Rated torque (Nm)		23.3	29.0	34.5	♦	♦	♦
Stall current (A)		8.9	11.2	13.6	♦	♦	♦
Rated power (kW)		2.44	3.04	3.61	♦	♦	♦
R (ph-ph) (Ohms)		1.36	0.94	0.72	♦	♦	♦
L (ph-ph) (mH)		21.3	15.2	12.3	♦	♦	♦
Recommended power conn' size		1	1	1	♦	♦	♦
Speed 1500 (rpm)	Kt (Nm/A) = Ke (V/krpm) =				3.2 196		
Rated torque (Nm)		♦	♦	♦	22.3	27.0	31.7
Stall current (A)		♦	♦	♦	7.80	9.8	11.9
Rated power (kW)		♦	♦	♦	3.50	4.2	5.0
R (ph-ph) (Ω)		♦	♦	♦	1.36	0.94	0.72
L (ph-ph) (mH)		♦	♦	♦	21.3	15.2	12.3
Connection type		♦	♦	♦	1	1	1
Speed 2000 (rpm)	Kt (Nm/A) = Ke (V/krpm) =	1.4 85.5			2.4 147		
Rated torque (Nm)		21.4	25.7	29.6	21.4	25.7	29.6
Stall current (A)		17.8	22.5	27.1	10.4	13.1	15.8
Rated power (kW)		4.48	5.38	6.2	4.48	5.38	6.20
R (ph-ph) (Ohms)		0.34	0.24	0.18	0.79	0.62	0.49
L (ph-ph) (mH)		5.3	3.8	3.1	12.2	9.7	8.3
Recommended power conn' size		1.5	1.5	1.5	1	1	1
Speed 3000 (rpm)	Kt (Nm/A) = Ke (V/krpm) =	0.93 57			1.6 98		
Rated torque (Nm)		18.4	20.9	♦	18.4	20.9	23
Stall current (A)		26.9	33.9	♦	15.6	19.7	23.8
Rated power (kW)		5.78	6.57	♦	5.78	6.57	7.23
R (ph-ph) (Ohms)		0.12	0.1	♦	0.34	0.24	0.18
L (ph-ph) (mH)		1.9	1.6	♦	5.3	3.8	3.1
Recommended power conn' size		1.5	1.5	♦	1	1.5	1.5

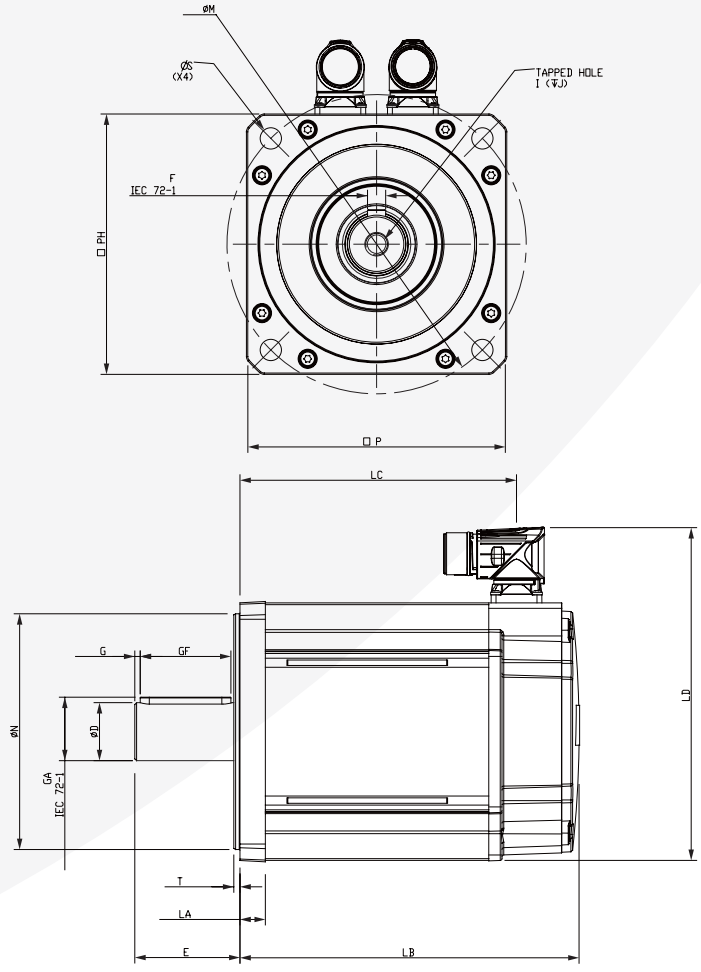

♦ *not available*

Δt= 100°C winding 40°C maximum ambient. All data subject to +/-10% tolerance
Stall torque, rated torque and power relate to maximum continuous operation tested in a 20°C ambient at **12kHz drive switching frequency**
All other figures relate to a 20°C motor temperature. Maximum intermittent winding temperature is 140°C

Motor dimension (mm)

	Unbraked length		Braked length		Flange thickness	Register length	Register diameter	Overall height	Flange square	Fixing hole diameter	Fixing hole PCD	Motor housing	Mounting bolts
	LB (± 0.9)	LC (± 1.0)	LB (± 0.9)	LC (± 1.0)	LA(± 0.5)	T(± 0.1)	N(j6)	LD(± 0.3)	P(± 0.3)	S(H14)	M(± 0.5)	PH(± 0.5)	
142C	217.0	182.5	282.5	248.0	14.0	3.4	130.0	183.5	142.0	12.0	165.0	142.0	M10
142D	247.0	212.5	312.5	278.0									
142E	277.0	242.5	342.5	308.0				183.5-204.5					

Shaft dimensions (mm)

	Shaft diameter	Shaft length	Key height	Key length	Key to shaft end	Key width	Tapped hole thread size	Tapped hole depth
	D (j6)	E	GA	GF	G	F (h9)	I	J (± 1)
32.0 Std	32.0	58.0	35.0	50.0	3.0	10.0	M12 x 1.75	29.0

2.3.6 Frame size 190

Motor frame size (mm)		190ED			190UD		
Voltage (Vrms)		200-240			380-480		
Frame length		C	D	F	C	D	F
Continuous stall torque (Nm)		52.0	62.0	85.0	52	62.0	85.0
Peak torque (Nm)		156.0	186.0	255.0	156	186.0	255.0
Standard inertia (kg cm²)		54.6	70.9	103.5	54.6	70.9	103.5
Winding thermal time constant (sec)		311.0	316.0	324.0	311.0	316.0	324.0
Standard motor weight (kg)		27.74	34.3	47.42	27.74	34.3	47.42
Number of poles		10	10	10	10	10	10
Speed 1000 (rpm)	Kt (Nm/A) = Ke (V/krpm) =	2.8 171					
Rated torque (Nm)		49.0	56.5	77.5	♦	♦	♦
Stall current (A)		18.6	22.1	30.4	♦	♦	♦
Rated power (kW)		5.13	5.92	8.12	♦	♦	♦
R (ph-ph) (Ohms)		0.47	0.4	0.23	♦	♦	♦
L (ph-ph) (mH)		12.3	10.4	6.8	♦	♦	♦
Recommended power conn' size		1.5	1.5	1.5	♦	♦	♦
Speed 1500 (rpm)	Kt (Nm/A) = Ke (V/krpm) =				3.2 196		
Rated torque (Nm)		♦	♦	♦	46.2	52.2	68.5
Stall current (A)		♦	♦	♦	16.3	19.4	26.6
Rated power (kW)		♦	♦	♦	7.26	8.2	10.76
R (ph-ph) (Ohms)		♦	♦	♦	0.57	0.4	0.23
L (ph-ph) (mH)		♦	♦	♦	14.2	10.4	6.8
Recommended power conn' size		♦	♦	♦	1.5	1.5	1.5
Speed 2000 (rpm)	Kt (Nm/A) = Ke (V/krpm) =	1.4 85.5			2.4 147		
Rated torque (Nm)		42.5	♦	♦	42.5	45.3	56.0
Stall current (A)		37.14	♦	♦	21.7	25.8	35.42
Rated power (kW)		8.9	♦	♦	8.9	9.5	11.7
R (ph-ph) (Ohms)		0.12	♦	♦	0.34	0.17	0.14
L (ph-ph) (mH)		3.1	♦	♦	8.2	5.05	4.55
Recommended power conn' size		1.5	♦	♦	1.5	1.5	1.5

♦ *not available*

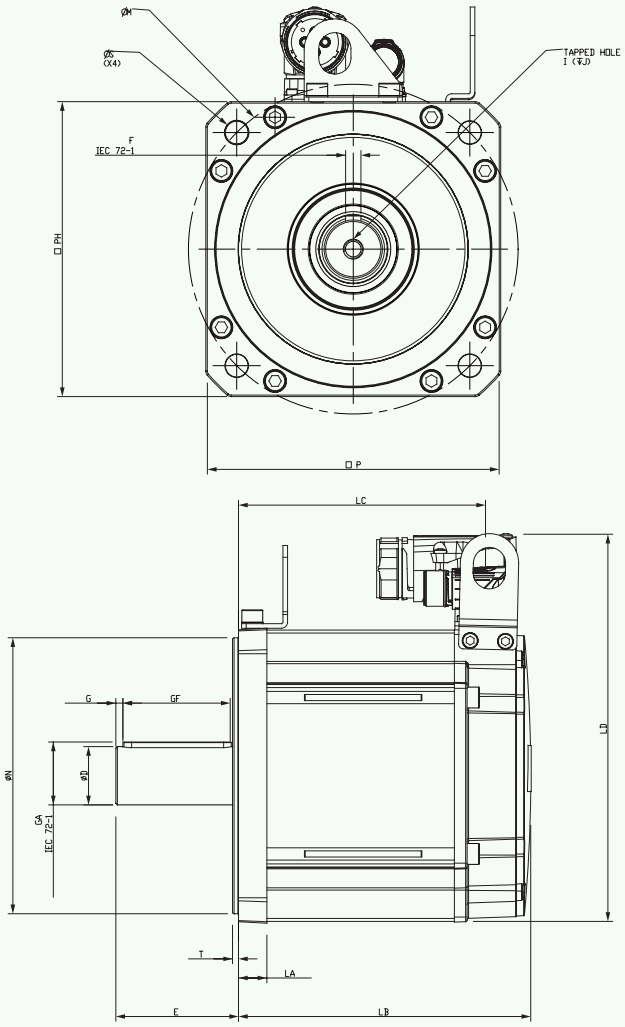

Δt= 100°C winding 40°C maximum ambient. All data subject to +/-10% tolerance
Stall torque, rated torque and power relate to maximum continuous operation tested in a 20°C ambient at **12kHz drive switching frequency**
All other figures relate to a 20°C motor temperature. Maximum intermittent winding temperature is 140°C

Motor dimension (mm)

	Unbraked length		Braked length		Flange thickness	Register length	Register diameter	Overall height	Flange square	Fixing hole diameter	Fixing hole PCD	Motor housing	Mounting bolts
	LB (± 0.9)	LC (± 1.0)	LB (± 0.9)	LC (± 1.0)	LA(± 0.5)	T(± 0.1)	N(j6)	LD(± 0.3)	P(± 0.3)	S(H14)	M(± 0.5)	PH(± 0.5)	
190C	220.6	191.1	319.1	289.6	18.5	3.9	180.0	252.5	190.3	14.5	215.0	190.0	M12
190D	250.6	221.1	349.1	319.6									
190F	310.6	281.1	409.1	379.6									

Shaft dimensions (mm)

	Shaft diameter	Shaft length	Key height	Key length	Key to shaft end	Key width	Tapped hole thread size	Tapped hole depth
	D (j6)	E	GA	GF	G	F (h9)	I	J (± 1)
38.0 Std	38.0	80.0	41.0	70.0	4.6	10.0	M12 x 1.75	29.0

3 Introduction to Unimotor fm fan blown

3.1 In many instances you may need more performance across the torque range. At Control Techniques Dynamics we have modified the electromagnetic construction of our Unidrive fm motors to do just that. Our fan blown range increases performance with higher rms values.

3.1.1 Faster set-up, optimized performance

When a Control Techniques servo drive is connected to a Unimotor fm fan blown fitted with a SinCos or Absolute encoder, it can recognize and communicate with the motor to obtain the "electronic nameplate" data. This motor data can then be used to automatically optimize the drive settings. This feature simplifies commissioning and maintenance, ensures consistent performance and saves time.

3.1.2 Custom built motors

As part of our commitment to you, we can design special products to meet your application specific requirements.

Custom built motors are identified by the code -S*** added to the end of the part number and can include custom shafts, connections or coatings.

e.g. SPZ - Motor is left unpainted
SON - Motor is fully painted

3.1.3 Wide range of accessories

In addition we offer a range of accessories to cover your system requirements:

- Feedback and power cables for static and dynamic applications
- Gearboxes
- Cable connectors

3.1.4 Accuracy and resolution to suit your application requirements

Choosing the right feedback device for your application is critical in getting optimum performance. Unimotor fm fan blown has a range of feedback options that offer different levels of accuracy and resolution to suit most applications:

- Resolver: robust for extreme applications and conditions – low accuracy, medium resolution
- Incremental encoder: high accuracy, medium resolution
- Inductive/capacitive SinCos/Absolute: medium accuracy, high resolution
- Optical/SinCos/Absolute: high accuracy, high resolution
- Single turn and multi-turn: Hiperface and EnDat protocols supported.

3.1.5 Reliability and innovation

Unimotor fm fan blown is designed using a proven development process that prioritizes innovation and reliability. This process has resulted in a market leading reputation for both performance and quality.

3.1.6 Matched motor and drive combinations

Drives and motors from Control Techniques are designed to function as an optimized system. Unimotor fm fan blown is the perfect partner for Unidrive M.

3.1.7 Features

Unimotor fm fan blown is suitable for a wide range of industrial applications, due to it's extensive range of features:

- Torque range from 10.3 Nm to 104.5 Nm
- High energy parking brakes
- Numerous connector variants, including: vertical,90° low profile, 90° rotatable and hybrid box
- Variety of flange possibilites (IEC/NEMA)
- IP65 conformance; sealed against water spray and dust when mounted and connected
- Low inertia for high dynamic performance; high inertia option available
- World class performance
- Winding voltage for inverter supply of 400 V
- Rated speeds from 2,000 to 6,000 rpm and others available.
- Thermal protection by PTC thermistor/ optional KTY84.130 sensor.

Unimotor fm fan blown

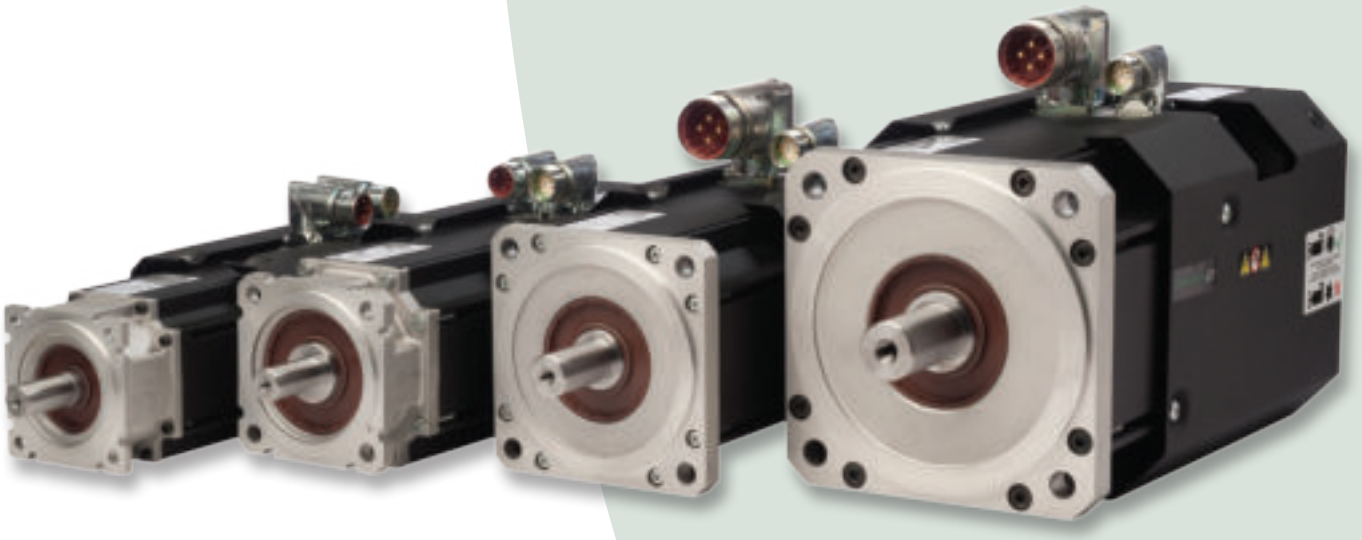

3.1.8 Quick reference table

Frame size	PCD (mm)	Unimotor fm - fan blown					
095	100	10.3	11.9				
115	115			17.0	22.1		
142	165					24.0	34.9
190	215						81.0 104.5
Stall	10	12		20		35	85 105

3.1.9 Conformance and standards

3.2 ORDERING INFORMATION

3.2.1 UNIMOTOR FM FAN BLOWN ORDERING INFORMATION - STANDARD LEAD TIME

Use the information below in the illustration to create an order code for a Unimotor fm.

095	U	5	B	40	0	B
Frame size	**Motor voltage**	**Peak torque selection**	**Stator length**	**Rated speed**	**Brake**	**Connection type[1]**
	095 - 190 frame	**095 - 190 frame**	**095 frame**	**095 frame**	**095 – 190 frame**	**Size 1**
095	**U** = 400V	**5** = Peak torque	**D**	**30** = 3000 rpm	**0** = Not fitted (Std)	**B** = Power and signal 90° rotatable
115			**E**	**40** = 4000 rpm	**5** = Parking brake (fibre)	
142			**115 frame**	**60** = 6000 rpm	**6** = Parking brake (resin)*	**C** = Power 90° rotatable and signal vertical
190			**D**	**115 frame**	**X** = Special	
			E	**30** = 3000 rpm	*not available on 142 or 190 frame	**V** = Power and signal vertical
			142 frame	**40** = 4000 rpm		
			D	**60** = 6000 rpm		**Size 1.5**
			E	**142 frame**		**J** = Power and signal 90° rotatable
			190 frame	**30** = 3000 rpm		
			G	**40** = 4000 rpm		**N** = Power 90° rotatable and signal vertical
			H	**60** = 6000 rpm		
				190 frame		**M** = Power and signal vertical
				20 = 2000 rpm		
				30 = 3000 rpm		**Hybrid box**
				40 = 4000 rpm		**H** = Power hybrid box

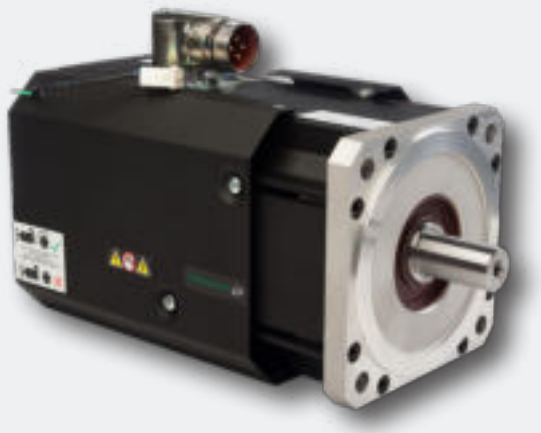

[1] 142 and 190 frame motors the Power plug will be size 1.5
[2] PTC thermistor = DIN44082
[3] KTY thermistor = KTY84

A	CA		A	100		190		
Output shaft	**Feedback device**		**Inertia**	**PCD**		**Shaft diameter**		
095 – 190 frame	**095 – 190 frame**		**095 – 190 frame**	**095 frame only**				
A = Key	**AE** = Resolver		**A** = Standard + PTC[2]	**100**	Std	**19.0**	D-E	Opt
B = Plain shaft	**CA** = Incremental Encoder	CFS50	**B** = High + PTC			**22.0**	D-E	Std
	EC = Inductive EnDat SinCos Multi-turn	EQI 1331	**C** = Standard + KTY[3]	**115 frame only**				
	FC = Inductive EnDat SinCos Single-turn	ECI 1319		**115**	Std	**24.0**	D	Std
	RA = Optical Hiperface SinCos Multi-turn	SRM 50				**28.0**	E	Std
	SA = Optical Hiperface SinCos Single-turn	SRS 50		**142 frame only**				
	EB = Optical EnDat SinCos Multi-turn	EQN 1325		**165**	Std	**24.0**	D-E	Opt
	FB = Optical EnDat SinCos Single-turn	ECN 1313				**28.0**	D	Std
	EF = Inductive EnDat Multi-turn FS	EQI 1331FS				**32.0**	E	Std
	FF = Inductive EnDat Single-turn FS	ECI 1319FS		**190 frame only**				
				215	Std	**32.0**	G-H	Opt
						38.0	G	Std
						42.0	H	Std

3.3 PEAK TORQUE INFORMATION

Even though the stall and rated torque are increased in the Unimotor fm fan blown range, there is no increase in the peak value. This means that the peak factors for fan blown motors are different to standard self-cooled motors. The new values are shown in the table.

U5	Peak factor @ 0 - 100% rms	
095	Peak Factor 0% - 88% rms	Peak Factor @ 100% rms
	3	2
115	Peak Factor 0% - 86% rms	Peak Factor @ 100% rms
	3	1.5
142	Peak Factor 0% - 57% rms	Peak Factor @ 100% rms
	2.15	1
190	Peak Factor 0% - 60% rms	Peak Factor @ 100% rms
	3	2

Unimotor fm fan blown motor peak torque graph

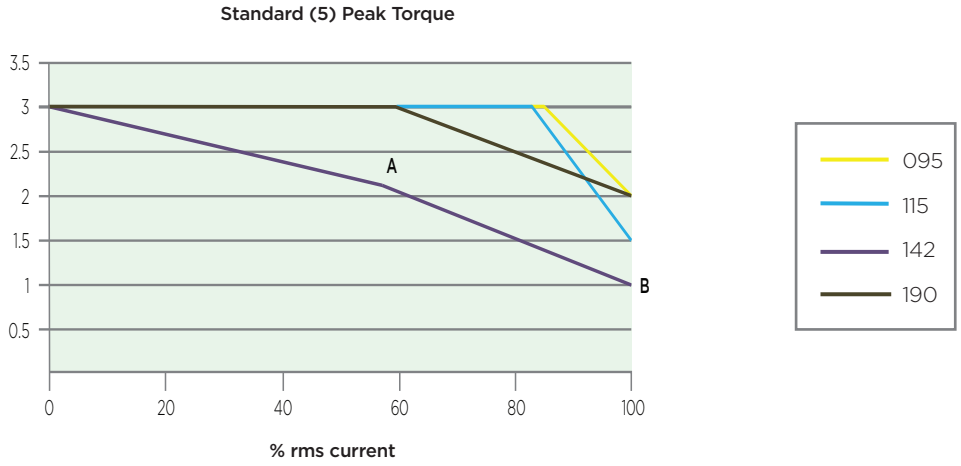

Peak torque is defined for a maximum period of 250ms, rms % rms = % rms duty cycle Current for motor in application.

To use the graph correctly, you will need to calculate the rms current and rms speed of the application. The rms current value must be converted into a percentage of the full motor current. For example, if the full current available is 10A and the rms current is 7.5A, then the percentage rms current value is 75%. Plot this value onto the graph to obtain the peak factor. The peak factor is then used to calculate the peak torque value using the table below.

Peak factor x Stall current x Kt = Peak torque
An example would be with a 142U5E300 motor, where the % rms current value is calculated to 50%, the peak factor would be 2.15 (Point A)
Peak factor x Stall current x Kt = Peak torque
2.15 x 21.8 x 1.6 = 75.0 Nm
But if the % rms current were to be calculated at a level of 100%, the peak factor would equal 1.00. (Point B)
Peak factor x Stall current x Kt = Peak torque
1.00 x 21.8 x 1.6 = 34.9 Nm

IP ratings

Motor

IP65S – No ingress of dust; no contact with or approach to live or moving parts inside the enclosure. Water projected by a nozzle against enclosure from any direction shall have no harmful effects. (Excluding the front shaft seal.)

(S = device standing still during water test)

Fan motor and circuit board

IP54 – The fan motor and circuit board are coated to protect them against splash water and humidity.

Complete Unimotor fm fan blown motor assembly

IP20 – Protected against solid objects >12mm. E.g. fingers.

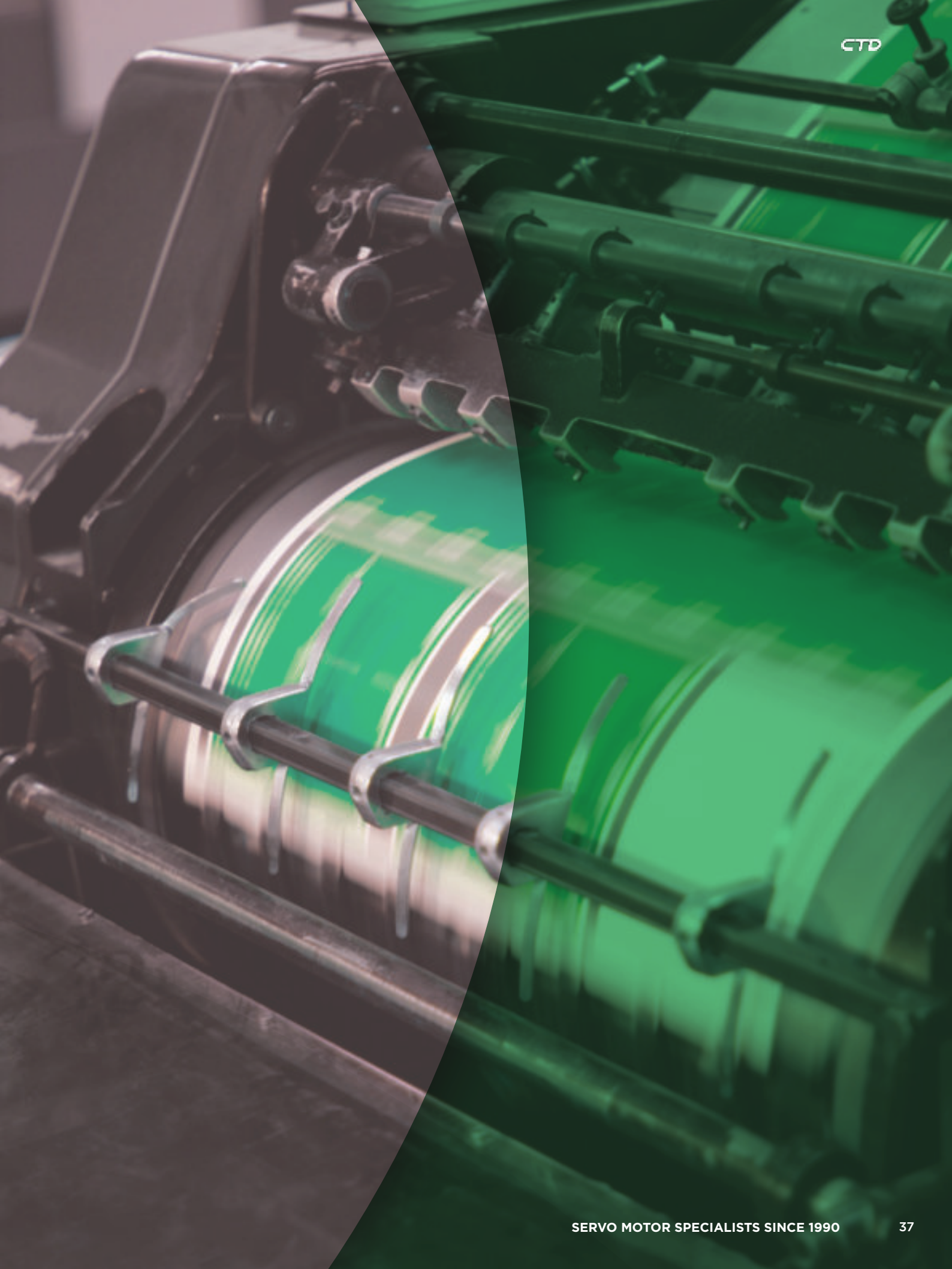

3.4 DIMENSIONS & RATINGS

3.4.1 Frame size 095

Motor frame size (mm)		095U5	
Voltage (Vrms)		380-480	
Frame length		D	E
Continuous stall torque (Nm)		10.3	11.9
Peak torque (Nm)		23.7	27.8
Standard inertia (kgcm²)		4.83	5.98
High Inertia (kgcm²)		6.69	7.80
Winding thermal time constant (sec)		108.3	111.7
Standard Motor weight (kg)		8.2	9.4
Number of poles		6	6
Speed 3,000 (rpm)	Kt (Nm/A) =	1.60	
	Ke (V/krpm) =	98	
Rated torque (Nm)		9.5	10.8
Stall current (A)		6.5	7.4
Rated power(kW)		2.97	3.38
R (ph-ph) (Ohms)		3.2	2.27
L (ph-ph) (mH)		15.95	12.06
Recommended power conn' size		1	1
Speed 4,000 (rpm)	Kt (Nm/A) =	1.20	
	Ke (V/krpm) =	73.5	
Rated torque (Nm)		9.0	10.1
Stall current (A)		8.6	9.9
Rated power(kW)		3.75	4.22
R (ph-ph) (Ohms)		1.81	1.40
L (ph-ph) (mH)		8.86	7.25
Recommended power conn' size		1	1
Speed 6,000 (rpm)	Kt (Nm/A) =	0.80	
	Ke (V/krpm) =	49	
Rated torque (Nm)		6.9	7.1
Stall current (A)		12.9	14.9
Rated power(kW)		4.33	4.45
R (ph-ph) (Ohms)		0.77	0.58
L (ph-ph) (mH)		3.83	3.02
Recommended power conn' size		1	1

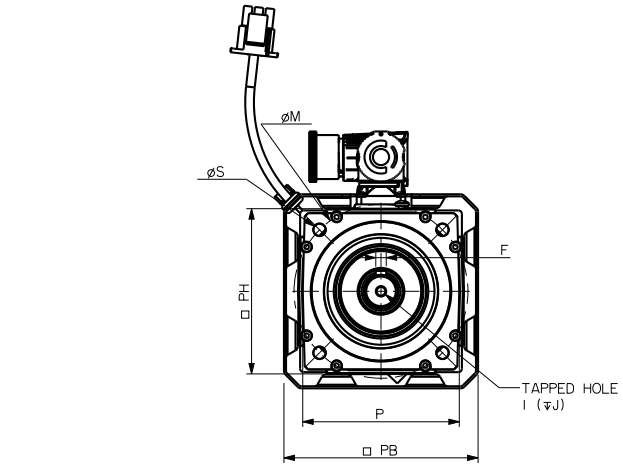

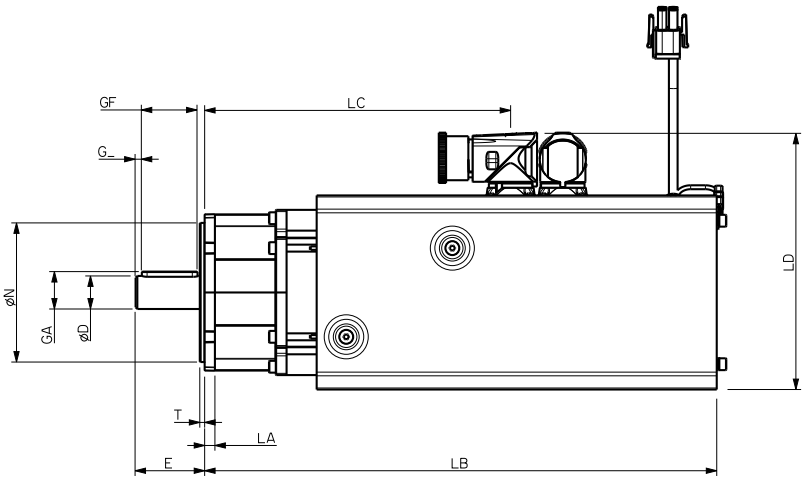

Δt= 100 °C winding 40 °C maximum ambient
All data subject to ± 10 % tolerance
Stall torque, rated torque and power relate to maximum continuous operation tested in a 20 °C ambient at **12 kHz drive switching frequency**
All other figures relate to a 20 °C motor temperature
Maximum Intermittant winding temperature is 140°C

Motor dimensions (mm) Note all dimensions shown are at nominal

	Unbraked length		Braked length		Flange thickness	Register length	Register diameter	Overall height (B)	Flange square	Fixing hole diameter	Fixing hole PCD	Motor housing	Fan housing	Mounting bolts
	LB (± 1)	LC (± 1)	LB (± 1)	LC (± 1)	LA (±0.5)	T (± 0.1)	N (j6)	LD (± 1)	P (± 0.4)	S (H14)	M	PH (±0.6)	PB	
095D	384.4	265.9	414.4	295.9	5.9	2.8	80.0	147.3	90.0	7.0	100.0	95.0	111.6	M6
095E	414.4	295.9	444.4	325.9										

Output shaft dimensions (mm)

	Shaft diameter	Shaft length	Key height	Key length	Key to shaft end	Key width	Tapped hole thread size	Tapped hole depth
	D	E (± 0.45)	GA	GF (± 0.25)	G_ (± 1.1)	F	I	J (± 1)
095D-E (Opt)	19.0	40.0	21.5	32.0	3.6	6.0	M6 x 1.0	17.0
095D-E (Std)	22.0	50.0	24.5	40.0	4.6	6.0	M8 x 1.25	20.0

Optional connector height (mm)

Connector type	Overall height
	LD (± 1)
A	139.8
C	147.3
V	139.8

3.4.2 Frame size 115

Motor frame size (mm)		115U5	
Voltage (Vrms)		380-480	
Frame length		D	E
Continuous stall torque (Nm)		17.0	22.1
Peak torque (Nm)		41.0	48.0
Standard inertia (kgcm²)		12.5	14.8
High Inertia (kgcm²)		17.1	19.4
Winding thermal time constant (sec)		127.4	141.5
Standard Motor weight (kg)		12.6	14.5
Number of poles		6	6
Speed 3,000 (rpm)	Kt (Nm/A) =	1.60	
	Ke (V/krpm) =	98	
Rated torque (Nm)		14.0	17.1
Stall current (A)		10.6	13.8
Rated power(kW)		4.4	5.39
R (ph-ph) (Ohms)		1.5	1.23
L (ph-ph) (mH)		11.6	9.89
Recommended power conn' size		1	1
Speed 4,000 (rpm)	Kt (Nm/A) =	1.20	
	Ke (V/krpm) =	73.5	
Rated torque (Nm)		13.2	16.1
Stall current (A)		14.2	18.4
Rated power(kW)		5.53	6.72
R (ph-ph) (Ohms)		0.84	0.68
L (ph-ph) (mH)		0.27	5.35
Recommended power conn' size		1	HYBRID
Speed 6,000 (rpm)	Kt (Nm/A) =	0.80	
	Ke (V/krpm) =	49	
Rated torque (Nm)		10.4	12.6
Stall current (A)		21.3	27.7
Rated power(kW)		6.51	7.91
R (ph-ph) (Ohms)		0.4	0.3.1
L (ph-ph) (mH)		3.07	2.46
Recommended power conn' size		HYBRID ONLY	

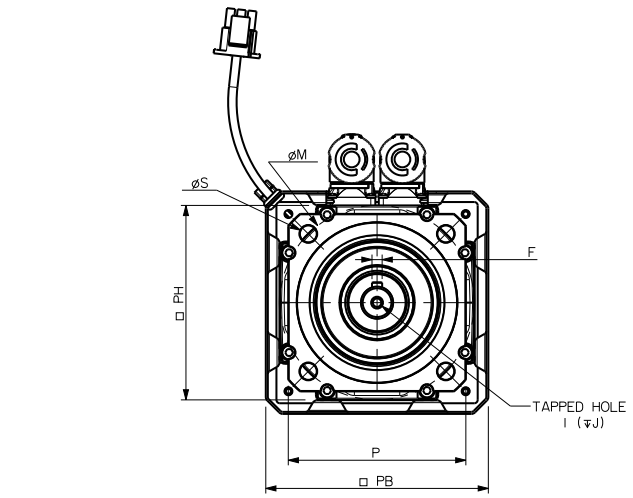

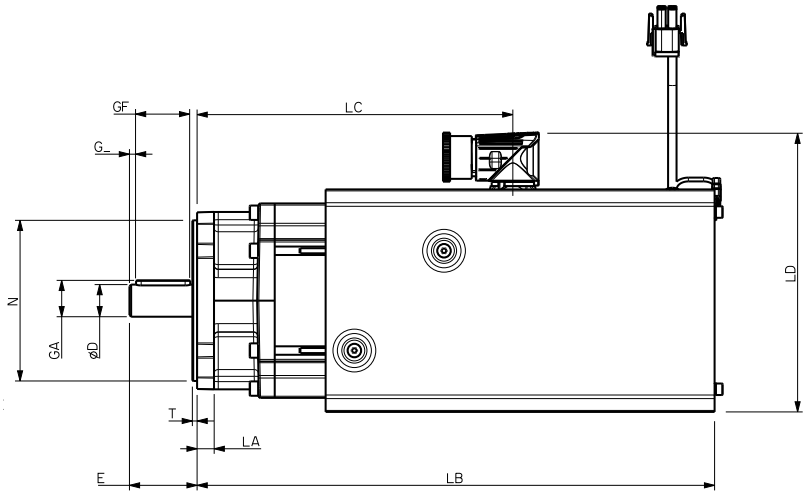

Δt= 100 °C winding 40 °C maximum ambient
All data subject to ± 10 % tolerance
Stall torque, rated torque and power relate to maximum continuous operation tested in a 20 °C ambient at **12 kHz drive switching frequency**
All other figures relate to a 20 °C motor temperature
Maximum Intermittant winding temperature is 140°C

Motor dimensions (mm) Note all dimensions shown are at nominal

	Unbraked length		Braked length		Flange thickness	Register length	Register diameter	Overall height (B)	Flange square	Fixing hole diameter	Fixing hole PCD	Motor housing	Fan housing	Mounting bolts
	LB (± 1)	LC (± 1)	LB (± 1)	LC (± 1)	LA (± 0.5)	T (± 0.1)	N (j6)	LD (± 1)	P (± 0.2)	S (H14)	M	PH (±0.6)	PB	
115D	396.0	283.8	426.0	313.8	10.1	2.8	95.0	164.8	105.0	10.0	115.0	115.0	131.6	M9
115E	426.0	313.8	456.0	343.8										

Output shaft dimensions (mm)

	Shaft diameter	Shaft length	Key height	Key length	Key to shaft end	Key width	Tapped hole thread size	Tapped hole depth
	D	E (± 0.45)	GA	GF (± 0.25)	G_ (± 1.1)	F	I	J (± 1)
115D (Std)	24.0	50.0	27.0	40.0	4.6	8.0	M8 x 1.25	20.0
115E (Std)	28.0	60.0	31.0	50.0	4.6	8.0	M10 x 1.5	23.0

Optional connector height (mm)

Connector type	Overall height
	LD (± 1)
A	157.3
C	164.8
V	157.3
HYBRID	198.6

3.4.3 Frame size 142

Motor frame size (mm)		142U5	
Voltage (Vrms)		380-480	
Frame length		D	E
Continuous stall torque (Nm)		24.0	34.9
Peak torque (Nm)		61.5	75.0
Standard inertia (kgcm²)		30.2	36.9
High Inertia (kgcm²)		43.1	49.8
Winding thermal time constant (sec)		205.6	249.3
Standard Motor weight (kg)		17.6	20.7
Number of poles		6	6
Speed 3,000 (rpm)	Kt (Nm/A) =	1.60	
	Ke (V/krpm) =	98	
Rated torque (Nm)		20.1	25.6
Stall current (A)		15.0	21.8
Rated power(kW)		6.33	8.04
R (ph-ph) (Ohms)		0.7	0.5
L (ph-ph) (mH)		8.91	6.7
Recommended power conn' size		1.5	1.5
Speed 4,000 (rpm)	Kt (Nm/A) =	1.20	
	Ke (V/krpm) =	73.5	
Rated torque (Nm)		18.3	23.0
Stall current (A)		20.0	29.1
Rated power(kW)		7.67	9.63
R (ph-ph) (Ohms)		0.41	0.29
L (ph-ph) (mH)		5.06	3.97
Recommended power conn' size		1.5	1.5
Speed 6,000 (rpm)	Kt (Nm/A) =	0.80	
	Ke (V/krpm) =	49	
Rated torque (Nm)		13.0	15.0
Stall current (A)		30.0	43.6
Rated power(kW)		8.17	9.42
R (ph-ph) (Ohms)		0.16	0.13
L (ph-ph) (mH)		2.07	1.68
Recommended power conn' size		1.5	HYBRID

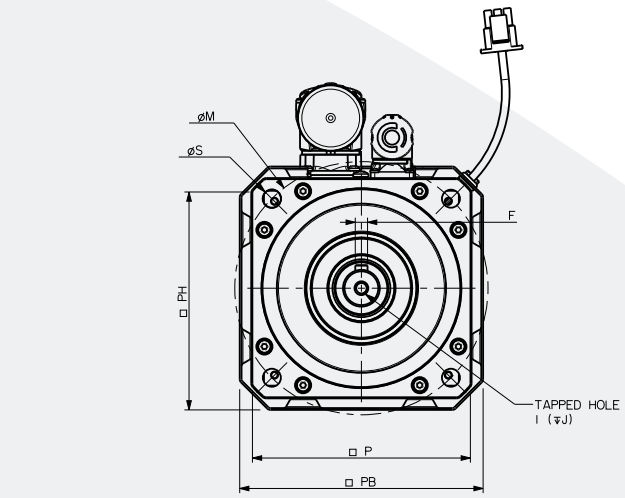

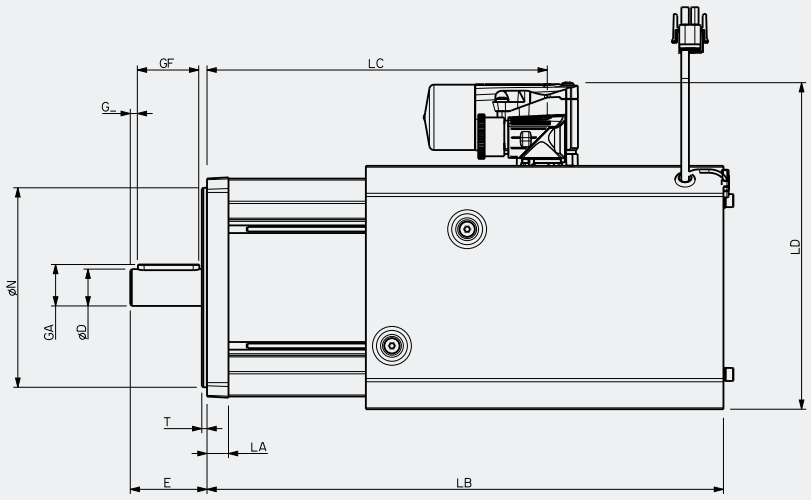

Δt= 100 °C winding 40 °C maximum ambient
All data subject to ± 10 % tolerance
Stall torque, rated torque and power relate to maximum continuous operation tested in a 20 °C ambient at **12 kHz drive switching frequency**
All other figures relate to a 20 °C motor temperature
Maximum Intermittant winding temperature is 140°C

Motor dimensions (mm) Note all dimensions shown are at nominal

	Unbraked length		Braked length		Flange thickness	Register length	Register diameter	Overall height (J)	Flange square	Fixing hole diameter	Fixing hole PCD	Motor housing	Fan housing	Mounting bolts
	LB (± 1)	LC (± 1)	LB (± 1)	LC (± 1)	LA (± 0.5)	T (± 0.1)	N (j6)	LD (± 1)	P (± 0.2)	S (H14)	M	PH (±0.6)	PB	
142D	366.5	251.7	426.5	311.7	14.0	3.4	130.0	212.8	142.0	12.0	165.0	143.0	158.60	M10
142E	396.5	281.7	456.5	341.7										

Output shaft dimensions (mm)

	Shaft diameter	Shaft length	Key height	Key length	Key to shaft end	Key width	Tapped hole thread size	Tapped hole depth
	D	E (± 0.45)	GA	GF (± 0.25)	G_ (± 1.1)	F	I	J (± 1)
142D-E (Opt)	24.0	50.0	27.0	40.0	4.6	8.0	M8 x 1.25	20.0
142D (Std)	28.0	60.0	31.0	50.0	4.6	8.0	M10 x 1.5	23.0
142E (Std)	32.0	58.0	35.0	50.0	4.6	10.0	M12 x 1.75	29.0

Optional connector height (mm)

Connector type	Overall height
	LD (± 1)
M	192.3
HYBRID	225.6
B	191.8

3.4.4 Frame size 190

Motor frame size (mm)		190U5	
Voltage (Vrms)		380-480	
Frame length		G	H
Continuous stall torque (Nm)		81.0	104.5
Peak torque (Nm)		213.0	231.0
Standard inertia (kgcm²)		142.3	160.8
High Inertia (kgcm²)		180.8	199.3
Winding thermal time constant (sec)		425.1	564.4
Standard Motor weight (kg)		45.8	50.6
Number of poles		8	8
Speed 2,000 (rpm)	Kt (Nm/A) =	2.40	
	Ke (V/krpm) =	147	
Rated torque (Nm)		70.0	81.0
Stall current (A)		33.8	43.5
Rated power(kW)		14.66	16.96
R (ph-ph) (Ohms)		0.26	0.23
L (ph-ph) (mH)		6.89	6.3
Recommended power conn' size		1.5	HYBRID BOX SMALL
Speed 3,000 (rpm)	Kt (Nm/A) =	1.60	
	Ke (V/krpm) =	98	
Rated torque (Nm)		65.0	68.0
Stall current (A)		50.6	65.3
Rated power(kW)		20.42	21.36
R (ph-ph) (Ohms)		0.15	0.08
L (ph-ph) (mH)		3.06	2.42
Recommended power conn' size		HYBRID BOX SMALL	HYRBID BOX LARGE
Speed 4,000 (rpm)	Kt (Nm/A) =	1.20	
	Ke (V/krpm) =	73.5	
Rated torque (Nm)		49.0	52.3
Stall current (A)		67.5	87.1
Rated power(kW)		20.53	21.92
R (ph-ph) (Ohms)		0.11	0.06
L (ph-ph) (mH)		2.13	1.55
Recommended power conn' size		HYBRID BOX LARGE	HYBRID BOX LARGE

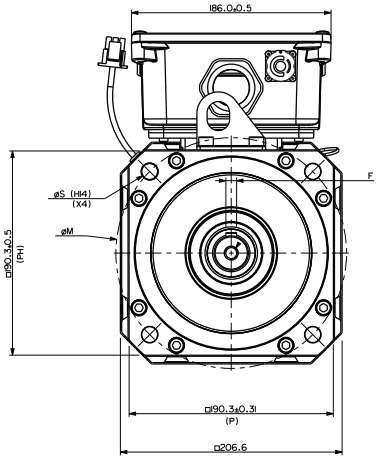

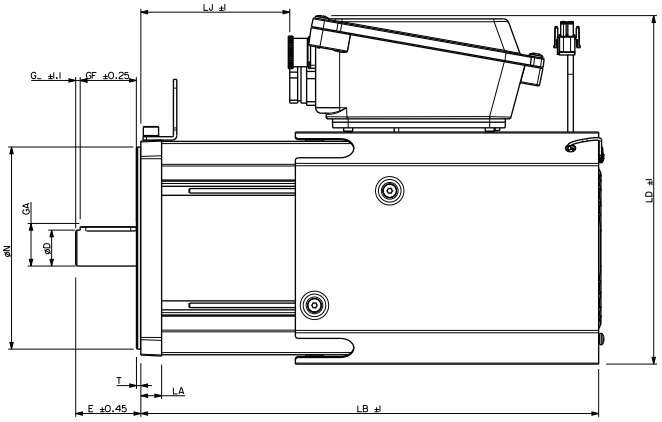

Δt= 100 °C winding 40 °C maximum ambient
All data subject to ± 10 % tolerance
Stall torque, rated torque and power relate to maximum continuous operation tested in a 20 °C ambient at **12 kHz drive switching frequency**
All other figures relate to a 20 °C motor temperature
Maximum Intermittant winding temperature is 140°C

Motor dimensions (mm) Note all dimensions shown are at nominal

	Unbraked length		Braked length		Flange thickness	Register length	Register diameter	Overall height (H)	Flange square	Fixing hole diameter	Fixing hole PCD	Motor housing	Fan housing	Mounting bolts
	LB (± 1)	LJ (± 1)	LB (± 1)	LI (± 1)	LA (± 0.5)	T	N (j6)	LD (± 1)	P (± 0.31)	S (H14)	M	PH (± 0.5)	PB	
190G S	477.6	277.6	567.6	367.6	18.5	3.9	180.0	274.2	190.3	14.5	215.0	190.3	206.60	M12
190H S	507.6	307.6	597.6	397.6										
190G L	467.6	192.6	557.6	282.6				310.3						
190H L	497.6	222.6	587.6	216.6										

Output shaft dimensions (mm)

	Shaft diameter	Shaft length	Key height	Key length	Key to shaft end	Key width	Tapped hole thread size	Tapped hole depth
	D	E (± 0.45)	GA	GF (± 0.25)	G_ (± 1.1)	F	I	J
190G-H (Opt)	32.0	58.0	35.0	50.0	4.6	10.0	M12 x 1.75	29.0
190G (Std)	38.0	58.0	41.0	50.0	4.6	10.0	M12 x 1.75	29.0
190H (Std)	42.0	110.0	45.0	100.0	4.6	12.0	M16 x 2.0	37.0

Optional connector height (mm)

Connector type	Overall height
	LD (± 1)
N	260.8
M	240.3
J	260.8

4 Introduction to Geared Unimotor

4.1 Geared Unimotor combines high performance brushless AC servo motors along with in-line planetary gearboxes both designed for use in demanding continuous duty applications. The motors are available in six frame sizes, across the fm and hd range, with a wide selection of gearboxes..

4.1.1 Reliability and innovation

Geared Unimotor is designed using a proven development process that prioritizes innovation and reliability. This process has resulted in a market leading reputation for both performance and quality.

4.1.2 Wide range of accessories

In addition we offer a range of accessories to cover your system requirements:

- Fan boxes
- Cable connectors
- Gearbox adaptor plates

4.1.3 Ideal for retrofit

Geared Unimotor is an ideal retrofit choice with features to ensure it can integrate easily with your existing servo motor applications. Geared Unimotor has been designed so that existing Unimotor customers can easily migrate to the new platform. All connector interface types and mounting dimensions remain the same. If you are planning to retrofit your system, Geared Unimotor is the obvious choice.

4.1.4 Accuracy and resolution to suit your application requirements

Choosing the right feedback device for your application is critical in getting optimum performance. Geared Unimotor has a range of feedback options that offer different levels of accuracy and resolution to suit most applications:

- Resolver: robust for extreme applications and conditions – low accuracy, medium resolution
- Incremental encoder: high accuracy, medium resolution
- Inductive/capacitive SinCos/Absolute: medium accuracy, high resolution
- Optical/SinCos/Absolute: high accuracy, high resolution
- Single turn and multi-turn: Hiperface and EnDat protocols supported.

4.1.5 Faster set-up, optimized performance

- When a Control Techniques servo drive is connected to a Geared Unimotor fitted with a SinCos or Absolute encoder, it can recognize and communicate with the motor to obtain the “electronic nameplate” data. This motor data can then be used to automatically optimize the drive settings. This feature simplifies commissioning and maintenance, ensures consistent performance and saves time.

4.1.6 Features

Geared Unimotor is suitable for a wide range of industrial applications, due to it’s extensive range of features:

- Torque range from 1.25 Nm to 25 Nm
- High energy dissipation parking brakes
- High torque to inertia ratio for high dynamic performance (hd)
- Compact but powerful
- IP65 conformance; sealed against water spray and dust when mounted and connected
- Segmented stator design (hd)
- World class performance
- Rated speeds of 2,000 to 3,000 rpm and other available
- Thermal protection by PTC thermistor/ optional KTY84.130 sensor

4.1.7 Matched motor and drive combinations

Drives and geared motors from Control Techniques are designed to function as an optimized system. Geared Unimotor fm is the perfect partner for Unidrive M and Geared Unimotor hd with the Digitax HD.

4.1.8 Quick reference table

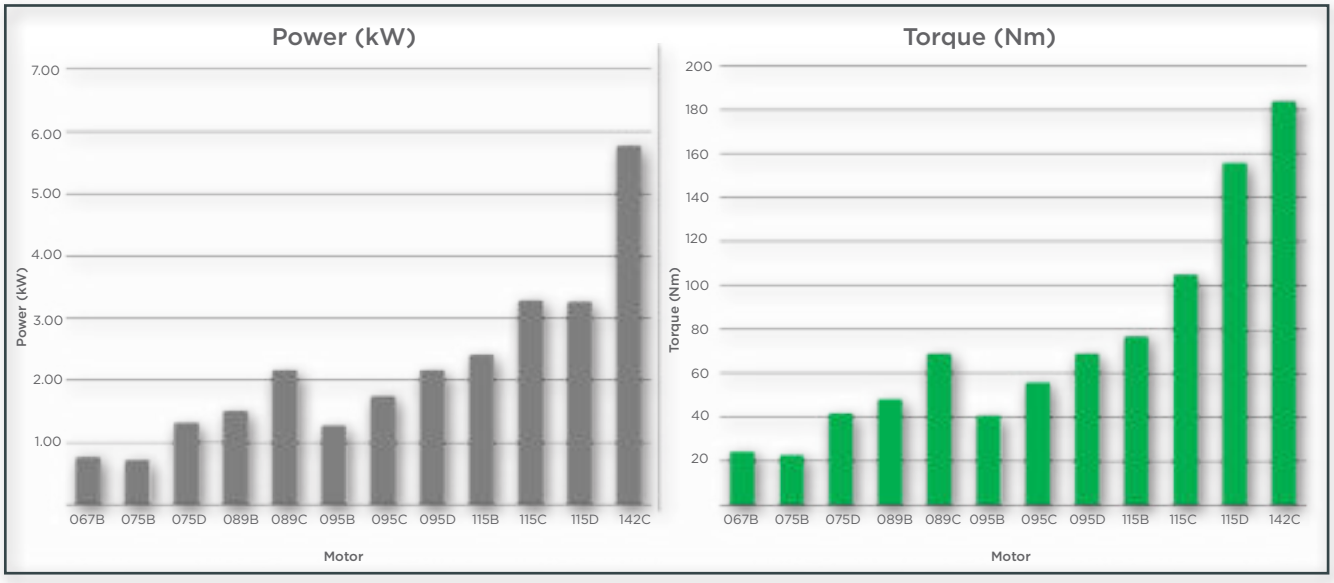

4.1.9 Conformance and standards

RoHS Compliant

4.2 GEARED UNIMOTOR ORDERING INFORMATION - D + 10 LEAD TIME

4.2.1 Use the information below in the table to create an order code for a **Geared Unimotor hd**.

089	UD	B	30	0	B
Frame size	**Motor voltage**	**Stator length**	**Rated speed**	**Brake**	**Connection type**
	067 – 142 frame	**067 frame**	**067 – 142 frame**	**067 – 142 frame**	**Size 1**
067	**UD** = 400 V	**B**	**30** = 300 rpm	**0** = Not fitted (Std)	**B** = Power and signal 90° rotatable
089		**089 frame**		**5** = Parking brake (fibre)[1]	
115		**B / C**		**6** = Parking brake (resin)[2]	
142		**115 frame**		[1] **5 brake ONLY available on 142 frame**	
		B / C / D		[2] **6 brake NOT available on 142 frame**	
		142 frame			
		C			

4.2.2 Use the information below in the table to create an order code for a **Geared Unimotor fm**.

075	U3	B	30	0	B
Frame size	**Motor voltage**	**Stator length**	**Rated speed**	**Brake**	**Connection type**
	075 – 095 frame	**075 frame**	**075 – 095 frame**	**075 – 095 frame**	**Size 1**
075	**U3** = 400 V	**B / D**	**30** = 300 rpm	**0** = Not fitted (Std)	**B** = Power and signal 90° rotatable
095		**095 frame**		**6** = Parking brake (resin)	**C** = Power 90° rotatable and signal vertical
		B / C / D			**V** = Power and signal vertical

NOTE.

Other geared motors are available on request but may increase motor lead time. Please check before ordering.

Gearboxes are not to be sold seperately.

A	CA		A	080220	GSAI	
Output shaft	**Feedback device**		**Inertia**	**Gearbox PCD/ Shaft**	**Gearbox code** (10:1 ratio)	
067 - 142 frame	**067 frame**		**067 - 142 frame**	**067 frame**		
A = Key	**AR** = Resolver		**A** = Standard + PTC[1]	**062160**	**GSAC**	VRL-070B
	CR = Incremental Encoder	R35i		**067 - 089 frame**		
	EM = Inductive EnDat SinCos Multi-turn	EQI 1130		**080220**	**GSAI**	VRL-090B
	089 - 142 frame			**089 - 115 frame**		
	AE = Resolver			**108320**	**GSAO**	VRL-120B
	CA = Incremental Encoder	CFS50		**115 - 142 frame**		
	EC = Inductive EnDat SinCos Multi-turn	EQI 1331		**140400**	**GSAU**	VRL-155B
	EB = Optical EnDat SinCos Single-turn	EQN 1325		**142 frame**		
	RA = Optical Hiperface SinCos Multi-turn	SRM 50		**184550**	**GSBA**	VRL-205B

A	CA		A	080220	GSAI	
Output shaft	**Feedback device**		**Inertia**	**Gearbox PCD/ Shaft**	**Gearbox code** (10:1 ratio)	
075 - 095 frame	**075 - 095 frame**		**075 - 095 frame**	**075 frame**		
A = Key	**AE** = Resolver		**A** = Standard + PTC	**062160**	**GSAC**	VRL-070B
	CA = Incremental Encoder	CFS50	**B** = High + PTC	**075 - 095 frame**		
	EC = Inductive EnDat SinCos Multi-turn	EQI 1331		**080220**	**GSAI**	VRL-090B
	FC = Inductive EnDat SinCos Single-turn	ECI 1319		**095 frame**		
	RA = Optical Hiperface SinCos Multi-turn	SRM 50		**108320**	**GSAO**	VRL-120B

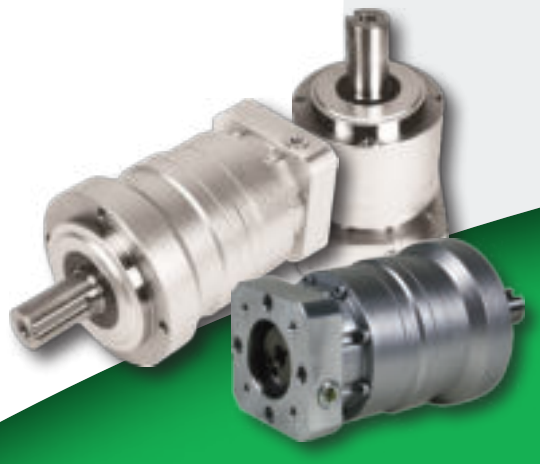

[1] PTC thermistor = DIN44082

4.3 DIMENSIONS & RATINGS

4.3.1 Frame size 067 (hd)

Motor frame size (mm)		067UD	
Voltage (Vrms)		380-480	
Frame length		B	
Gearbox		GSAC	GSAI
Continuous stall torque (Nm)		24.23	24.23
Peak torque (Nm)		35.0	72.68
Standard inertia (kg cm²)		0.17	0.30
Winding thermal time constant (sec)		61.0	61.0
Standard weight (kg)		4.06	6.06
Number of poles		10	10
Speed 300 (rpm)	Kt (Nm/A) = Ke (V/krpm) =	1.6 98	
Rated torque (Nm)		18.0	23.28
Stall current (A)		1.59	1.59
Rated power (kW)		0.77	0.77
R (ph-ph) (Ohms)		15.2	15.2
L (ph-ph) (mH)		54.2	54.2
Recommended power conn' size		1	1

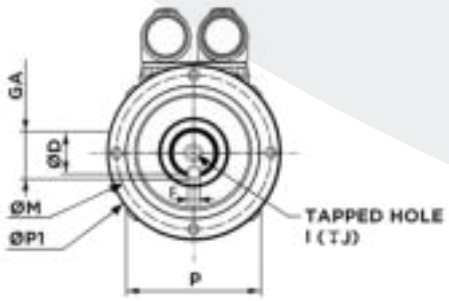

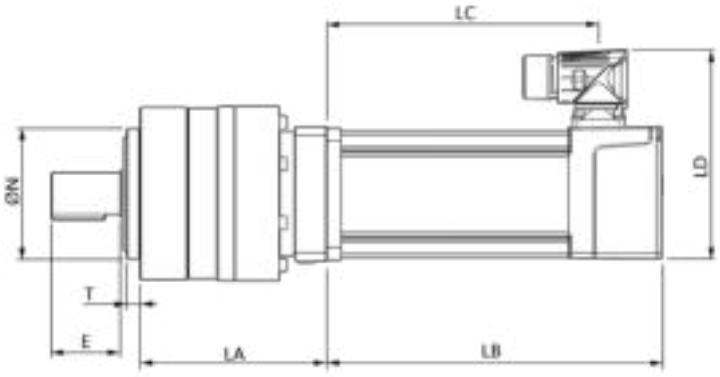

Δt= 100°C winding 40°C maximum ambient
All data subject to +/-10% tolerance
Stall torque, rated torque and power relate to maximum continuous operation tested in a 20°C ambient at **12kHz drive switching frequency**
All other figures relate to a 20°C motor temperature.
Maximum intermittent winding temperature is 140°C

Geared motor dimension (mm) **GSAC** - VRL070B 10:1

	Feedback AR, CR, EM				Face to Face	Register length	Register diameter	Overall height	Flange square	Fixing hole PCD	Gearbox diameter
	Unbraked length		Braked length								
	LB (± 0.9)	LC (± 1.0)	LB (± 0.9)	LC (± 1.0)	LA (± 0.5)	T (± 0.1)	N (j6)	LD (± 0.3)	P (± 0.3)	M (± 0.5)	P1 (± 0.5)
067B	172.9	139.0	207.9	174.0	84.0	3.0	52.0	111.5	70.0	62.0	70.0

Geared motor shaft dimensions (mm)

Shaft diameter	Shaft length	Key height	Key length	Key width	Tapped hole thread size	Tapped hole depth
D (j6)	E	GA	GF	F (h9)	I	J (± 1)
16.0	26.0	18.0	22.0	5.0	M5	12.5

Geared motor dimension (mm) **GSAI** - VRL090B 10:1

	Feedback AR, CR, EM				Face to Face	Register length	Register diameter	Overall height	Flange square	Fixing hole PCD	Gearbox diameter
	Unbraked length		Braked length								
	LB (± 0.9)	LC (± 1.0)	LB (± 0.9)	LC (± 1.0)	LA (± 0.5)	T (± 0.1)	N (j6)	LD (± 0.3)	P (± 0.3)	M (± 0.5)	P1 (± 0.5)
067B	172.9	139.0	207.9	174.0	97.0	3.0	68.0	111.5	70.0	80.0	90.0

Geared motor shaft dimensions (mm)

Shaft diameter	Shaft length	Key height	Key length	Key width	Tapped hole thread size	Tapped hole depth
D (j6)	E	GA	GF	F (h9)	I	J (± 1)
22.0	36.0	24.5	28.0	6.0	M8	19.0

4.3.2 Frame size 075 (fm)

Motor frame size (mm)		075U3			
Voltage (Vrms)		380-480			
Frame length		B	D	B	D
Gearbox		GSAC		GSAI	
Continuous stall torque (Nm)		25.65	44.65	25.65	44.65
Peak torque (Nm)		35.0	39.0	76.0	80.0
Standard inertia (kg cm²)		1.22	2.07	1.22	2.07
High inertia (kg cm²)		1.61	2.03	1.61	2.03
Winding thermal time constant (sec)		58.0	73.0	58.0	73.0
Standard weight (kg)		5.18	5.98	7.18	7.98
Number of poles		6	6	6	6
Speed 300 (rpm)	Kt (Nm/A) = Ke (V/krpm) =	1.6 98			
Rated torque (Nm)		18.0	36.05	21.85	39.9
Stall current (A)		1.7	2.9	1.7	2.9
Rated power (kW)		0.72	1.31	0.72	1.31
R (ph-ph) (Ohms)		21.07	7.81	21.07	7.81
L (ph-ph) (mH)		52.65	23.89	52.65	23.89
Recommended power conn' size		1	1	1	1

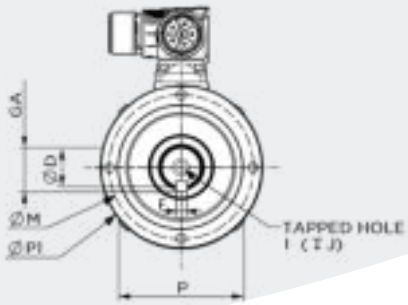

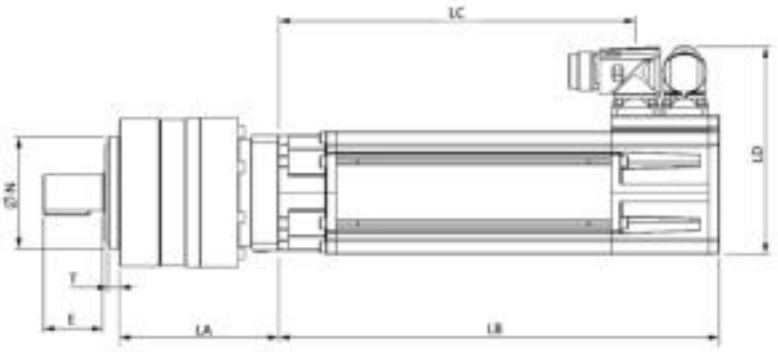

Δt= 100°C winding 40°C maximum ambient
All data subject to +/-10% tolerance
Stall torque, rated torque and power relate to maximum continuous operation tested in a 20°C ambient at
12kHz drive switching frequency
All other figures relate to a 20°C motor temperature.
Maximum intermittent winding temperature is 140°C

Geared motor dimension (mm) **GSAC** - VRL070B 10:1

	Feedback AE, CA, EC, FC, RA				Face to Face	Register length	Register diameter	Overall height	Flange square	Fixing hole PCD	Gearbox Diameter
	Unbraked length		Braked length								
	LB (± 0.9)	LC (± 1.0)	LB (± 0.9)	LC (± 1.0)	LA (± 0.5)	T (± 0.1)	N (j6)	LD (± 0.3)	P (± 0.3)	M (± 0.5)	P1 (± 0.5)
075B	238.2	187.2	268.2	217.2	84.0	3.0	52.0	126.0	70.0	62.0	70.0
075D	298.2	247.2	328.2	277.2							

Geared motor shaft dimensions (mm)

Shaft diameter	Shaft length	Key height	Key length	Key width	Tapped hole thread size	Tapped hole depth
D (j6)	E	GA	GF	F (h9)	I	J (± 1)
16.0	26.0	18.0	22.0	5.0	M5	12.5

Geared motor dimension (mm) **GSAI** - VRL090B 10:1

	Feedback AE, CA, EC, FC, RA				Face to Face	Register length	Register diameter	Overall height	Flange square	Fixing hole PCD	Gearbox Diameter
	Unbraked length		Braked length								
	LB (± 0.9)	LC (± 1.0)	LB (± 0.9)	LC (± 1.0)	LA (± 0.5)	T (± 0.1)	N (j6)	LD (± 0.3)	P (± 0.3)	M (± 0.5)	P1 (± 0.5)
075B	238.2	187.2	268.2	217.2	97.0	3.0	68.0	126.0	70.0	80.0	90.0
075D	298.2	247.2	328.2	277.2							

Geared motor shaft dimensions (mm)

Shaft diameter	Shaft length	Key height	Key length	Key width	Tapped hole thread size	Tapped hole depth
D (j6)	E	GA	GF	F (h9)	I	J (± 1)
22.0	36.0	24.5	28.0	6.0	M8	19.0

4.3.3 Frame size 089 (hd)

Motor frame size (mm)		089UD			
Voltage (Vrms)		380-480			
Frame length		B	C	B	C
Gearbox		GSAI		GSAO	
Continuous stall torque (Nm)		52.25	76.0	52.25	76.0
Peak torque (Nm)		80.0	80.0	156.75	225.0
Standard inertia (kg cm²)		1.61	2.34	1.61	2.34
Winding thermal time constant (sec)		93.0	98.0	93.0	98.0
Standard weight (kg)		7.78	8.88	12.08	13.18
Number of poles		10	10	10	10
Speed 300 (rpm)	Kt (Nm/A) = Ke (V/krpm) =	1.6 98			
Rated torque (Nm)		46.08	50.0	46.08	65.55
Stall current (A)		4.85	6.9	4.85	6.9
Rated power (kW)		1.52	2.17	1.52	2.17
R (ph-ph) (Ohms)		5.05	2.68	5.05	2.68
L (ph-ph) (mH)		38.4	21.7	38.4	21.7
Recommended power conn' size		1	1	1	1

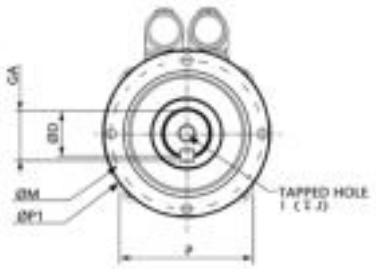

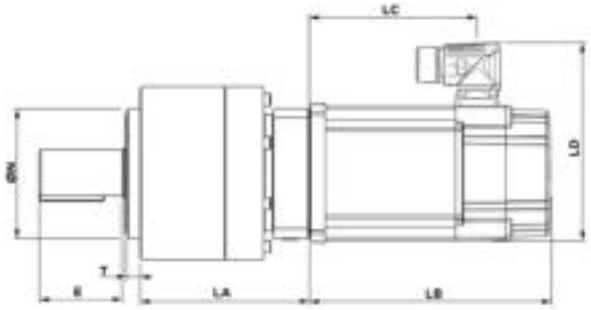

Δt= 100°C winding 40°C maximum ambient
All data subject to +/-10% tolerance
Stall torque, rated torque and power relate to maximum continuous operation tested in a 20°C ambient at **12kHz drive switching frequency**
All other figures relate to a 20°C motor temperature.
Maximum intermittent winding temperature is 140°C

Geared motor dimension (mm) **GSAI** - VRL090B 10:1

	Feedback EC				Face to Face	Register length	Register diameter	Overall height	Flange square	Fixing hole PCD	Gearbox Diameter
	Unbraked length*		Braked length*								
	LB (± 0.9)	LC (± 1.0)	LB (± 0.9)	LC (± 1.0)	LA (± 0.5)	T (± 0.1)	N (j6)	LD (± 0.3)	P (± 0.3)	M (± 0.5)	P1 (± 0.5)
089B	177.8	140.5	217.9	180.6	107.0	3.0	68.0	130.5	91.0	80.0	90.0
089C	207.8	170.5	247.9	210.6							

Geared motor shaft dimensions (mm)

Shaft diameter	Shaft length	Key height	Key length	Key width	Tapped hole thread size	Tapped hole depth
D (j6)	E	GA	GF	F (h9)	I	J (± 1)
22.0	36.0	24.5	28.0	6.0	M8	19.0

Geared motor dimension (mm) **GSAO** - VRL120B 10:1

	Feedback EC				Face to Face	Register length	Register diameter	Overall height	Flange square	Fixing hole PCD	Gearbox Diameter
	Unbraked length*		Braked length*								
	LB (± 0.9)	LC (± 1.0)	LB (± 0.9)	LC (± 1.0)	LA (± 0.5)	T (± 0.1)	N (j6)	LD (± 0.3)	P (± 0.3)	M (± 0.5)	P1 (± 0.5)
089B	177.8	140.5	217.9	180.6	117.0	3.0	90.0	130.5	91.0	108.0	120.0
089C	207.8	170.5	247.9	210.6							

Geared motor shaft dimensions (mm)

Shaft diameter	Shaft length	Key height	Key length	Key width	Tapped hole thread size	Tapped hole depth
D (j6)	E	GA	GF	F (h9)	I	J (± 1)
32.0	58.0	35.0	45.0	10.0	M12	28.0

* Addtional feedback lengths

Feedback Code	Additional Length
EB, CA, RA	+13.0
AE	-10.0

4.3.4 Frame size 095 (fm)

Motor frame size (mm)		095U3					
Voltage (Vrms)		380-480					
Frame length		B	C	D	B	C	D
Gearbox		GSAI			GSAO		
Continuous stall torque (Nm)		42.75	59.85	75.05	42.75	59.85	75.05
Peak torque (Nm)		80.0	80.0	80.0	128.25	179.55	225.0
Standard inertia (kg cm²)		2.60	3.72	4.83	2.60	3.72	4.83
High inertia (kg cm²)		4.50	5.60	6.70	4.50	5.60	6.70
Winding thermal time constant (sec)		82.0	90.0	108.0	82.0	90.0	108.0
Standard weight (kg)		7.99	9.25	10.51	12.29	13.55	14.81
Number of poles		6	6	6	6	6	6
Speed 300 (rpm)	Kt (Nm/A) = Ke (V/krpm) =	1.6 98					
Rated torque (Nm)		38.95	50.0	50.0	38.95	53.20	65.55
Stall current (A)		2.80	3.90	4.90	2.80	3.90	4.90
Rated power (kW)		1.29	1.76	2.17	1.29	1.76	2.17
R (ph-ph) (Ohms)		8.63	4.67	3.16	8.63	4.67	3.16
L (ph-ph) (mH)		33.71	21.09	15.95	33.71	21.09	15.95
Recommended power conn' size		1	1	1	1	1	1

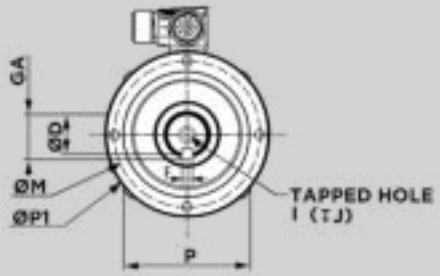

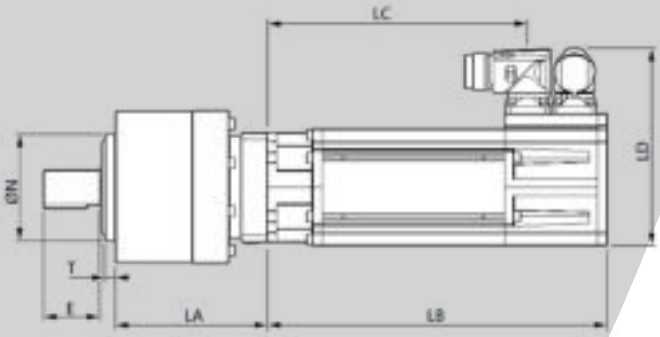

Δt= 100°C winding 40°C maximum ambient
All data subject to +/-10% tolerance
Stall torque, rated torque and power relate to maximum continuous operation tested in a 20°C ambient at
12kHz drive switching frequency
All other figures relate to a 20°C motor temperature.
Maximum intermittent winding temperature is 140°C

Geared motor dimension (mm) **GSAI** - VRL090B 10:1

	Feedback AE, CA, EC, FC, RA				Face to Face	Register length	Register diameter	Overall height	Flange square	Fixing hole PCD	Gearbox Diameter
	Unbraked length		Braked length								
	LB (± 0.9)	LC (± 1.0)	LB (± 0.9)	LC (± 1.0)	LA (± 0.5)	T (± 0.1)	N (j6)	LD (± 0.3)	P (± 0.3)	M (± 0.5)	P1 (± 0.5)
095B	231.8	180.8	261.8	210.8	107.0	3.0	68.0	139.0	90.0	80.0	90.0
095C	261.8	210.8	291.8	240.8							
095D	291.8	240.8	321.8	270.8							

Geared motor shaft dimensions (mm)

Shaft diameter	Shaft length	Key height	Key length	Key width	Tapped hole thread size	Tapped hole depth
D (j6)	E	GA	GF	F (h9)	I	J (± 1)
22.0	36.0	24.5	28.0	6.0	M8	19.0

Geared motor dimension (mm) **GSAO** - VRL120B 10:1

	Feedback AE, CA, EC, FC, RA				Face to Face	Register length	Register diameter	Overall height	Flange square	Fixing hole PCD	Gearbox Diameter
	Unbraked length		Braked length								
	LB (± 0.9)	LC (± 1.0)	LB (± 0.9)	LC (± 1.0)	LA (± 0.5)	T (± 0.1)	N (j6)	LD (± 0.3)	P (± 0.3)	M (± 0.5)	P1 (± 0.5)
095B	231.8	180.8	261.8	210.8	117.0	3.0	90.0	139.0	90.0	108.0	120.0
095C	261.8	210.8	291.8	240.8							
095D	291.8	240.8	321.8	270.8							

Geared motor shaft dimensions (mm)

Shaft diameter	Shaft length	Key height	Key length	Key width	Tapped hole thread size	Tapped hole depth
D (j6)	E	GA	GF	F (h9)	I	J (± 1)
32.0	58.0	35.0	45.0	10.0	M12	28.0

4.3.5 Frame size 115 (hd)

Motor frame size (mm)		115UD					
Voltage (Vrms)		380-480					
Frame length		B	C	D	B	C	D
Gearbox		GSAO			GSAU		
Continuous stall torque (Nm)		96.9	131.4	178.6	96.9	131.4	178.6
Peak torque (Nm)		225.0	225.0	225.0	290.7	416.1	470.0
Standard inertia (kg cm²)		4.41	6.39	8.38	4.41	6.39	8.38
Winding thermal time constant (sec)		164.0	168.0	175.0	164.0	168.0	175.0
Standard weight (kg)		14.75	16.52	18.29	22.95	24.72	26.49
Number of poles		10	10	10	10	10	10
Speed 300 (rpm)	Kt (Nm/A) = Ke (V/krpm) =	1.6 98					
Rated torque (Nm)		73.15	99.75	120.0	73.12	99.75	129.2
Stall current (A)		6.38	9.13	11.75	6.38	9.13	11.75
Rated power (kW)		2.42	3.30	4.27	2.42	3.30	4.27
R (ph-ph) (Ohms)		1.83	1.21	0.78	1.83	1.21	0.78
L (ph-ph) (mH)		16.9	12.7	8.70	16.9	12.7	8.70
Recommended power conn' size		1	1	1	1	1	1

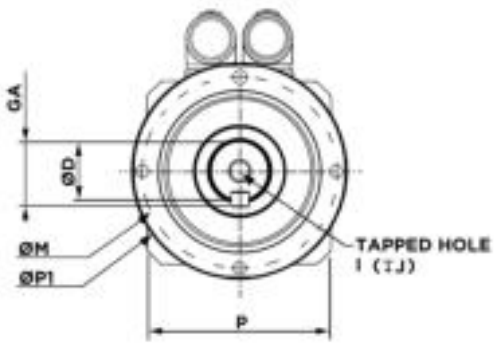

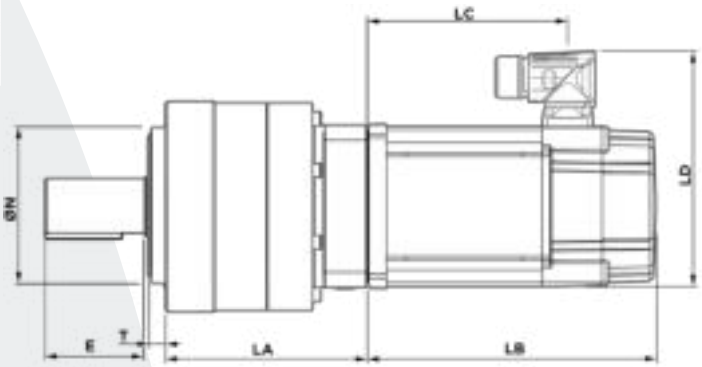

Δt= 100°C winding 40°C maximum ambient
All data subject to +/-10% tolerance
Stall torque, rated torque and power relate to maximum continuous operation tested in a 20°C ambient at **12kHz drive switching frequency**
All other figures relate to a 20°C motor temperature.
Maximum intermittent winding temperature is 140°C

Geared motor dimension (mm) **GSAO** - VRL120B 10:1

	Feedback EC				Face to Face	Register length	Register diameter	Overall height	Flange square	Fixing hole PCD	Gearbox Diameter
	Unbraked length*		Braked length*								
	LB (± 0.9)	LC (± 1.0)	LB (± 0.9)	LC (± 1.0)	LA (± 0.5)	T (± 0.1)	N (j6)	LD (± 0.3)	P (± 0.3)	M (± 0.5)	P1 (± 0.5)
115B	193.8	154.0	230.9	191.1	134.0	3.0	90.0	156.5	116.0	108.0	120.0
115C	223.8	184.0	260.9	221.1							
115D	253.8	214.0	290.9	251.1							

Geared motor shaft dimensions (mm)

Shaft diameter	Shaft length	Key height	Key length	Key width	Tapped hole thread size	Tapped hole depth
D (j6)	E	GA	GF	F (h9)	I	J (± 0.1)
32.0	58.0	35.0	45.0	10.0	M12	28.0

Geared motor dimension (mm) **GSAU** - VRL155B 10:1

	Feedback EC				Face to Face	Register length	Register diameter	Overall height	Flange square	Fixing hole PCD	Gearbox Diameter
	Unbraked length*		Braked length*								
	LB (± 0.9)	LC (± 1.0)	LB (± 0.9)	LC (± 1.0)	LA (± 0.5)	T (± 0.1)	N (j6)	LD (± 0.3)	P (± 0.3)	M (± 0.5)	P1 (± 0.5)
115B	193.8	154.0	230.9	191.1	152.0	3.0	120.0	156.5	116.0	140.0	155.0
115C	223.8	184.0	260.9	221.1							
115D	253.8	214.0	290.9	251.1							

Geared motor shaft dimensions (mm)

Shaft diameter	Shaft length	Key height	Key length	Key width	Tapped hole thread size	Tapped hole depth
D (j6)	E	GA	GF	F (h9)	I	J (± 0.1)
40.0	82.0	43.0	65.0	12.0	M16	36.0

* Addtional feedback lengths

Feedback Code	Additional Length
EB, CA, RA	+13.0
AE	-10.0

4.3.6 Frame size 142 (hd)

Motor frame size (mm)		142UD	
Voltage (Vrms)		380-480	
Frame length		C	
Gearbox		GSAU	GSBA
Continuous stall torque (Nm)		237.5	237.5
Peak torque (Nm)		470.0	711.55
Standard inertia (kg cm²)		17.0	17.0
Winding thermal time constant (sec)		245.0	245.0
Standard weight (kg)		28.74	51.74
Number of poles		10	10
Speed 300 (rpm)	Kt (Nm/A) =	1.6	
	Ke (V/krpm) =	98	
Rated torque (Nm)		174.8	174.8
Stall current (A)		15.6	15.6
Rated power (kW)		5.78	5.78
R (ph-ph) (Ohms)		0.34	0.34
L (ph-ph) (mH)		5.30	5.30
Recommended power conn' size		1	1

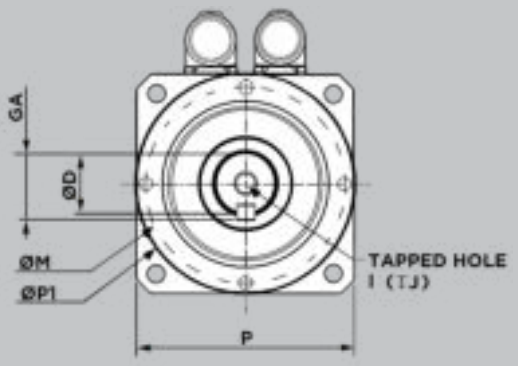

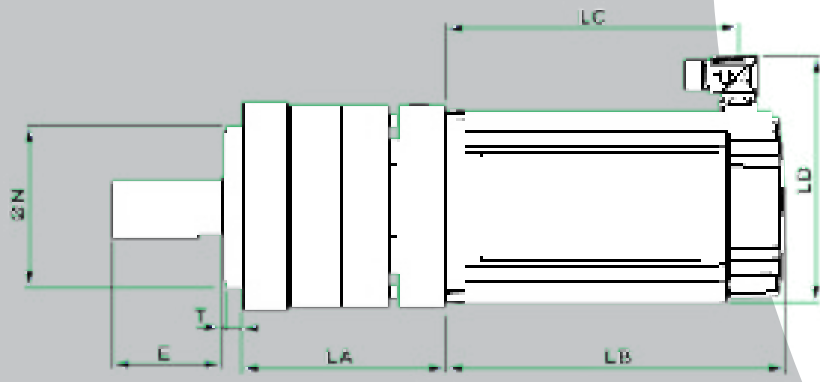

Δt= 100°C winding 40°C maximum ambient
All data subject to +/-10% tolerance
Stall torque, rated torque and power relate to maximum continuous operation tested in a 20°C ambient at **12kHz drive switching frequency**
All other figures relate to a 20°C motor temperature.
Maximum intermittent winding temperature is 140°C

Geared motor dimension (mm) **GSAU** - VRL155B 10:1

	Unbraked length		Braked length		Face to Face	Register length	Register diameter	Overall height	Flange square	Fixing hole PCD	Gearbox Diameter
	LB (± 0.9)	LC (± 1.0)	LB (± 0.9)	LC (± 1.0)	LA (± 0.5)	T (± 0.1)	N (j6)	LD (± 0.3)	P (± 0.3)	M (± 0.5)	P1 (± 0.5)
142C	217.0	182.5	282.5	248.0	167.0	3.0	120.0	183.5	142.0	140.0	155.0

Geared motor shaft dimensions (mm)

Shaft diameter	Shaft length	Key height	Key length	Key width	Tapped hole thread size	Tapped hole depth
D (j6)	E	GA	GF	F (h9)	I	J (± 1)
40.0	82.0	43.0	65.0	12.0	M16	36.0

Geared motor dimension (mm) **GSBA** - VRL205B 10:1

	Unbraked length		Braked length		Face to Face	Register length	Register diameter	Overall height	Flange square	Fixing hole PCD	Gearbox Diameter
	LB (± 0.9)	LC (± 1.0)	LB (± 0.9)	LC (± 1.0)	LA (± 0.5)	T (± 0.1)	N (j6)	LD (± 0.3)	P (± 0.3)	M (± 0.5)	P1 (± 0.5)
142C	217.0	182.5	282.5	248.0	186.5	3.0	160.0	183.5	142.0	184.0	205.0

Geared motor shaft dimensions (mm)

Shaft diameter	Shaft length	Key height	Key length	Key width	Tapped hole thread size	Tapped hole depth
D (j6)	E	GA	GF	F (h9)	I	J (± 1)
55.0	82.0	58.0	65.0	16.0	M20	42.0

4.4 GEARBOX SPECIFICATIONS

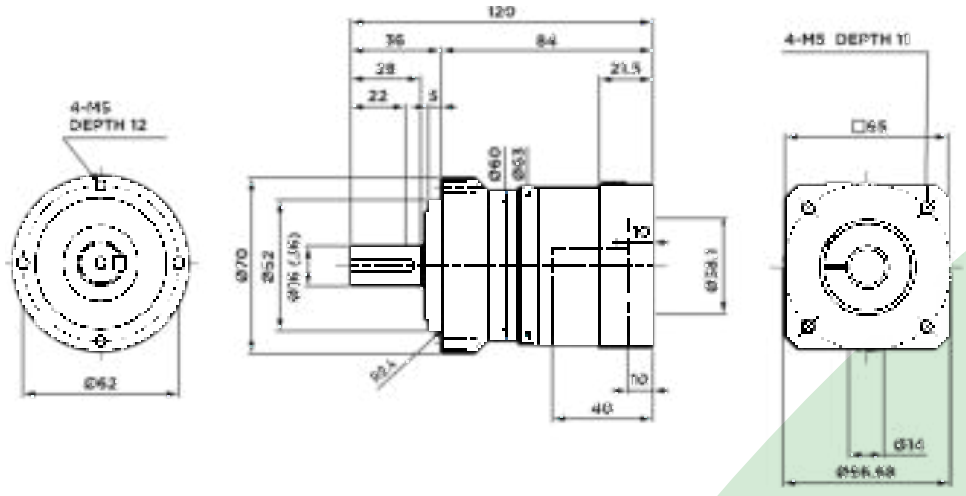

067 / 075

Gearbox Type	VRL-070B		
Stage	1		
Ratio	10:1		
Nominal Output Torque (Nm)	18	Moment of Inertia (≤ Ø 14) (kgcm²)	0.14
Maximum Acceleration Torque (Nm)	35	Moment of Inertia (≤ Ø 19) (kgcm²)	034
Emergency Stop Torque (Nm)	80	Efficiency (%)	95
Nominal Input Speed (rpm)	3000	Torsional Rigidity (Nm/arc-min)	3
Maximum Input Speed (rpm)	6000	Maximun Torsional Backlash (arc-min)	≤ 5
No Load Running Torque (Nm)	0.08	Noise Level (dB)	≤ 66
Permitted Radial Load (N)	640	Protection Class	IP54
Permitted Axial Load (N)	530	Ambient Temperature (°C)	0-40
Maximum Radial Load (N)	1200	Permitted Housing Temperature (°C)	90
Maximum Axial Load (N)	1100	Weight (kg)	1.5

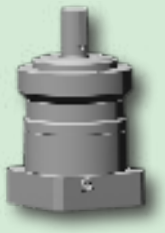

4.4.2 GSAI
VRL-090 (10:1)

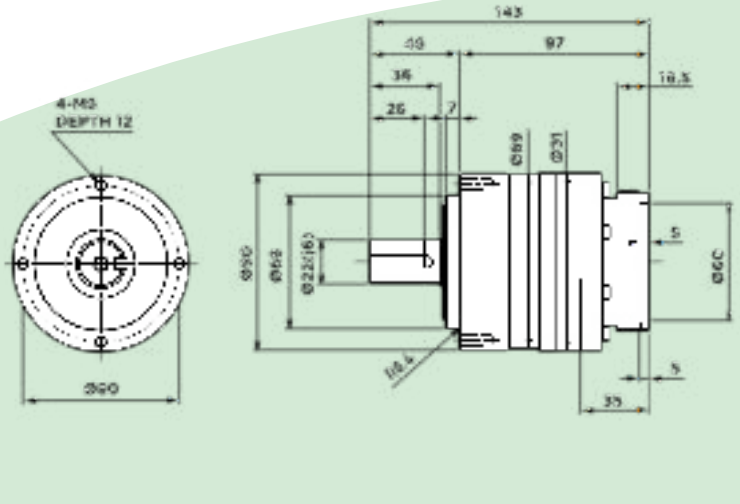

067 / 075

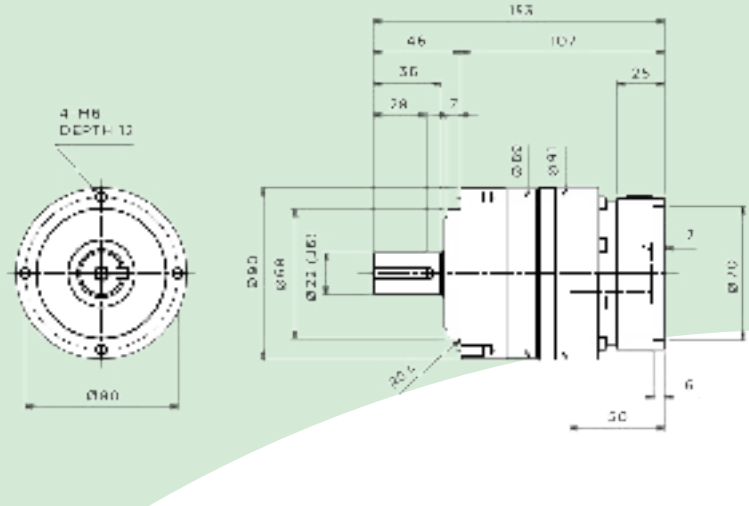

089 / 095

Gearbox Type	VRL-090B		
Stage	1		
Ratio	10:1		
Nominal Output Torque (Nm)	50	Moment of Inertia (≤ Ø 14) (kgcm²)	0.29
Maximum Acceleration Torque (Nm)	80	Moment of Inertia (≤ Ø 19) (kgcm²)	0.75
Emergency Stop Torque (Nm)	200	Efficiency (%)	95
Nominal Input Speed (rpm)	3000	Torsional Rigidity (Nm/arc-min)	10
Maximum Input Speed (rpm)	6000	Maximun Torsional Backlash (arc-min)	≤ 5
No Load Running Torque (Nm)	0.35	Noise Level (dB)	67
Permitted Radial Load (N)	1200	Protection Class	IP54
Permitted Axial Load (N)	1600	Ambient Temperature (°C)	0-40
Maximum Radial Load (N)	2400	Permitted Housing Temperature (°C)	90
Maximum Axial Load (N)	2200	Weight (kg)	3.5

4.4.3 GSAO
VRL-120 (10:1)

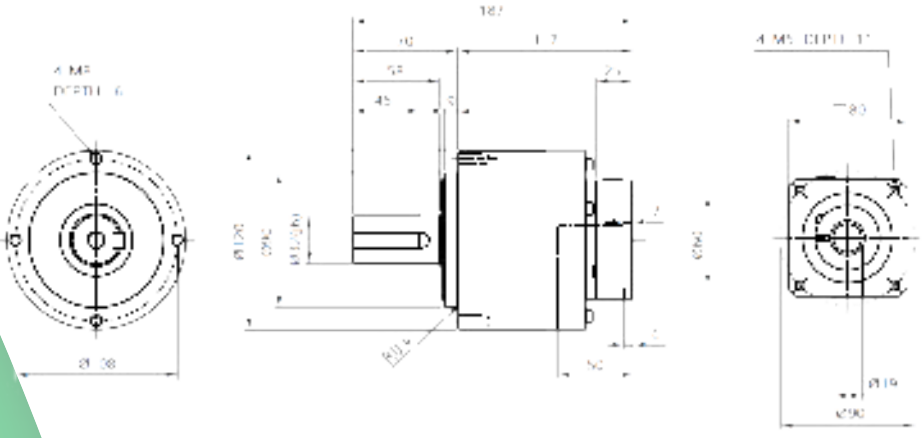

089 / 095

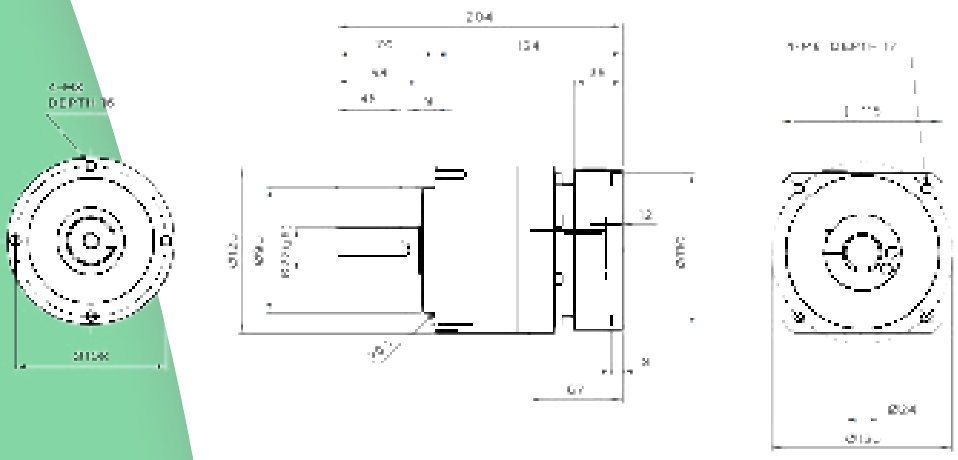

115

Gearbox Type	VRL-120B		
Stage	1		
Ratio	10:1		
Nominal Output Torque (Nm)	120	Moment of Inertia (≤ Ø 19) (kgcm²)	0.95
Maximum Acceleration Torque (Nm)	225	Moment of Inertia (≤ Ø28) (kgcm²)	3.00
Emergency Stop Torque (Nm)	500	Efficiency (%)	95
Nominal Input Speed (rpm)	3000	Torsional Rigidity (Nm/arc-min)	31
Maximum Input Speed (rpm)	6000	Maximun Torsional Backlash (arc-min)	≤ 5
No Load Running Torque (Nm)	1.30	Noise Level (dB)	71
Permitted Radial Load (N)	2000	Protection Class	IP54
Permitted Axial Load (N)	2500	Ambient Temperature (°C)	0-40
Maximum Radial Load (N)	4300	Permitted Housing Temperature (°C)	90
Maximum Axial Load (N)	3900	Weight (kg)	7.8

4.4.4 GSAU
VRL-155 (10:1)

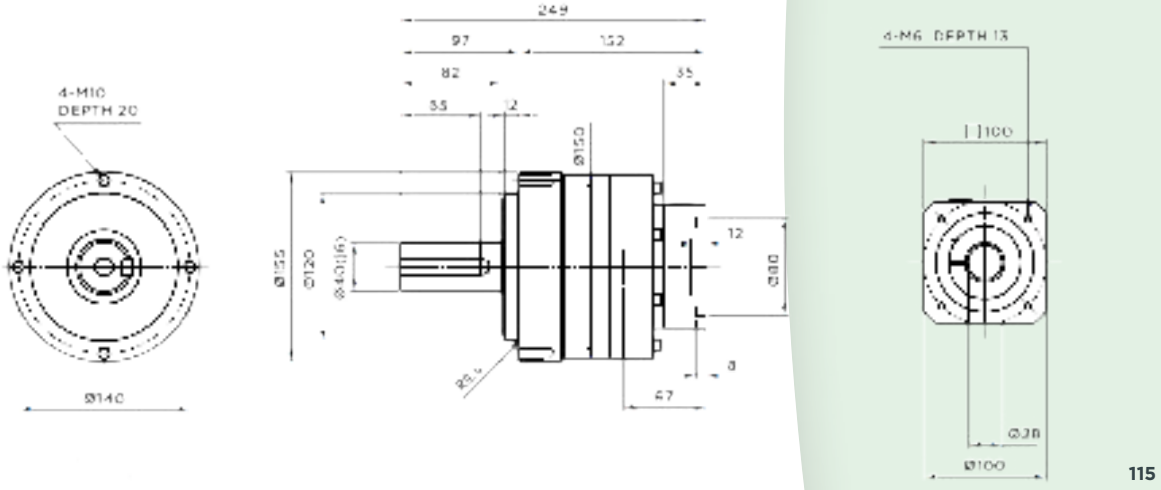

115

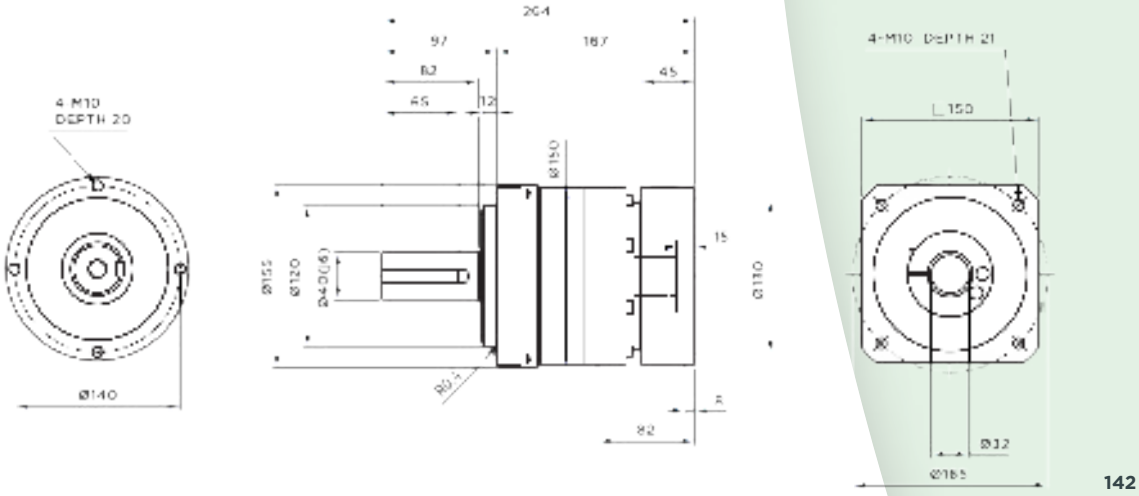

142

Gearbox Type	VRL-155B		
Stage	1		
Ratio	10:1		
Nominal Output Torque (Nm)	240	Moment of Inertia (≤ Ø 28) (kgcm²)	3.50
Maximum Acceleration Torque (Nm)	470	Moment of Inertia (≤ Ø 38) (kgcm²)	11.00
Emergency Stop Torque (Nm)	1000	Efficiency (%)	95
Nominal Input Speed (rpm)	2000	Torsional Rigidity (Nm/arc-min)	60
Maximum Input Speed (rpm)	4000	Maximun Torsional Backlash (arc-min)	≤ 5
No Load Running Torque (Nm)	1.63	Noise Level (dB)	67
Permitted Radial Load (N)	4700	Protection Class	IP54
Permitted Axial Load (N)	4100	Ambient Temperature (°C)	0-40
Maximum Radial Load (N)	9100	Permitted Housing Temperature (°C)	90
Maximum Axial Load (N)	8200	Weight (kg)	16.0

4.4.5 GSBA
VRL-205 (10:1)

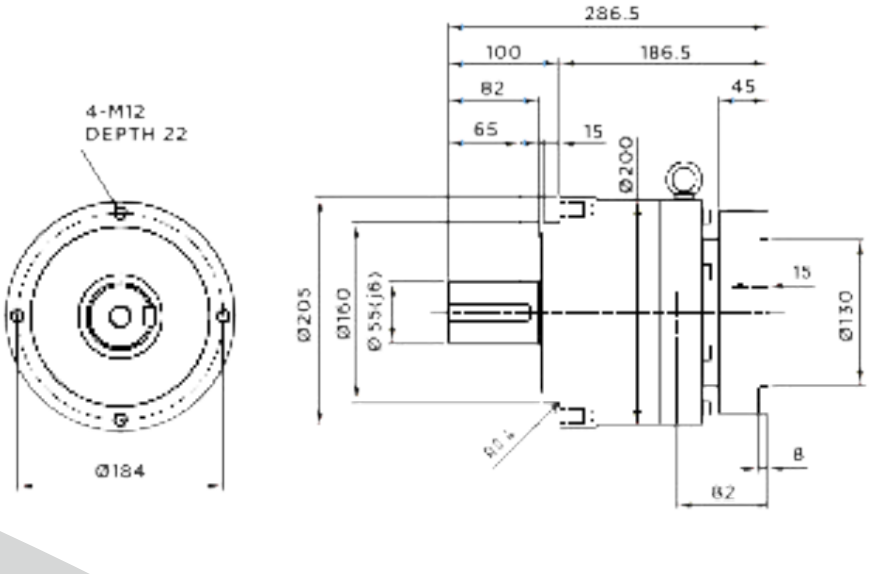

142

Gearbox Type	VRL-205B
Stage	1
Ratio	10:1
Nominal Output Torque (Nm)	500
Maximum Acceleration Torque (Nm)	970
Emergency Stop Torque (Nm)	2200
Nominal Input Speed (rpm)	1500
Maximum Input Speed (rpm)	3000
No Load Running Torque (Nm)	2.68
Permitted Radial Load (N)	8400
Permitted Axial Load (N)	7300
Maximum Radial Load (N)	15000
Maximum Axial Load (N)	14000
Moment of Inertia (≤ Ø 38) ($kgcm^2$)	14.00
Moment of Inertia (≤ Ø 48) ($kgcm^2$)	36.00
Efficiency (%)	95
Torsional Rigidity (Nm/arc-min)	175
Maximun Torsional Backlash (arc-min)	≤5
Noise Level (dB)	67
Protection Class	IP54
Ambient Temperature (°C)	0-40
Permitted Housing Temperature (°C)	90
Weight (kg)	39.0

4.4.6 GSFK
VRLZ-090 (9:1)

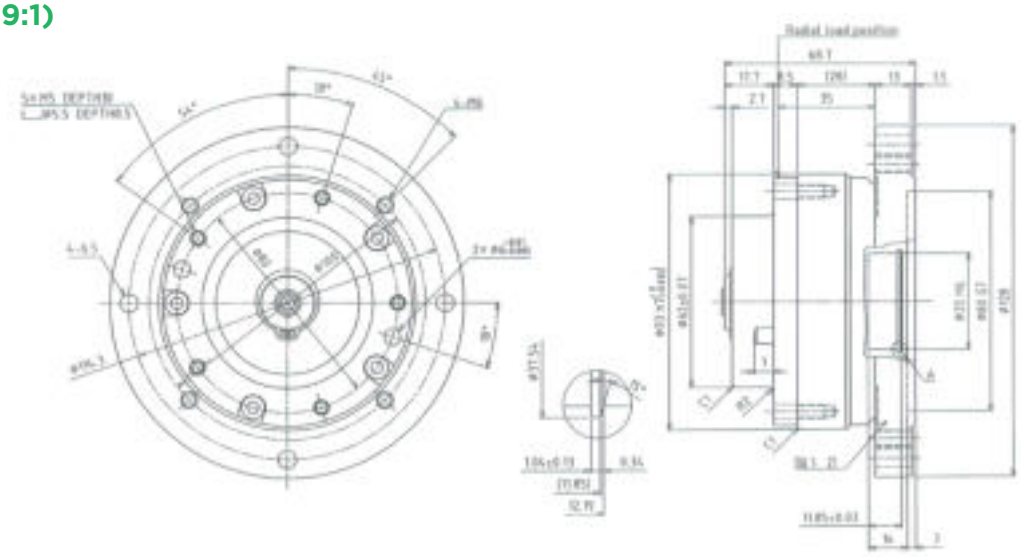

4.4.7 GSFL
VRLZ-120 (9:1)

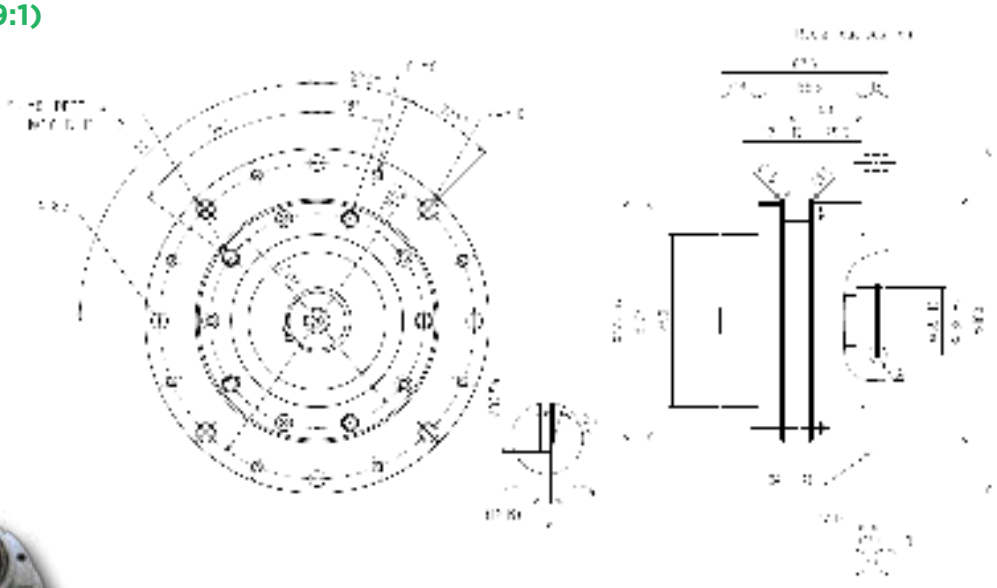

Gearbox	VRLZ - 090	VRLZ - 120	Gearbox	VRLZ - 090	VRLZ - 120
Type	In-Line Planetary	In-Line Planetary	Backlash (arc/min)	≤7	≤8
Ratio	9:1	9:1	Radial Load Max (Fr, N) @ E/2 & Fa=0	7250	10000
Stages	1	1	Axial Load Max (Fa, N) @ Fr=0	2200	7000
Weight (kg)	2.7	6.9	Output Torque Nominal (Nm)	36	88.6
Efficiency	95%	95%	Output Torque Peak(Nm)	72	225

5 Introduction to Unimotor hd Extra Low Voltage (48v)

5.1 Unimotor hd extra low voltage is a high dynamic brushless AC servo motor range designed for use in pulse duty applications where rapid acceleration and deceleration are required. The motors are available in frame sizes 067 to 142.

5.1.1 Faster set-up, optimized performance

With our proven direct mounting design, we can reduce the need for mechanical parts and increase the speed for application commissioning.

5.1.2 Custom built motors

We understand that each project is individual. For this reason we can develop application specific motors, removing constraints from your design process.

Whether it is shaft lengths or connector types, we can delivery the motor to your exact requirements.

5.1.3 Wide range of accessories

In addition we offer a range of accessories to cover your system requirements:

- Feedback and power cables for static and dynamic applications
- Gearboxes
- AGV Wheels

5.1.4 Accuracy and resolution to suit your application requirements

For performance, the right feedback device is critical. We have selected the incremental encoder for high accuracy and medium resolution.

5.1.5 Innovation

Control Techniques Dynamics is renowned for its innovation and reliability in the industrial servo, aerospace and defence markets since 1962 and is a member of the Nidec group of companies, our range of low-voltage motors is no exception.

Our Research and Development team works closely with leading Universities and, using our own proprietary software, design innovative products for a wide range of demanding environments.

5.1.6 Features

Unimotor hd extra low voltage is suitable for many industrial applications, the extensive range of features include:

- Torque range from 1.45 Nm to 10.2 Nm
- Connector variants, flying leads and 90° rotatable
- Variety of flange possibilities (IEC/NEMA)
- Various shaft diameters; keyed or plain
- IP65 conformance, sealing against water spray and dust when mounted and connected with optional connectors. This is reduced to IP50 when used with flying leads.
- Low winding voltages of 40 Vdc to 50 Vdc
- Rated speeds from 1,000 to 6,000 rpm and others available
- Thermal protection by a KTY84.130 sensor
- Flexible mounting
- All-in-one solution

Unimotor hd extra low voltage

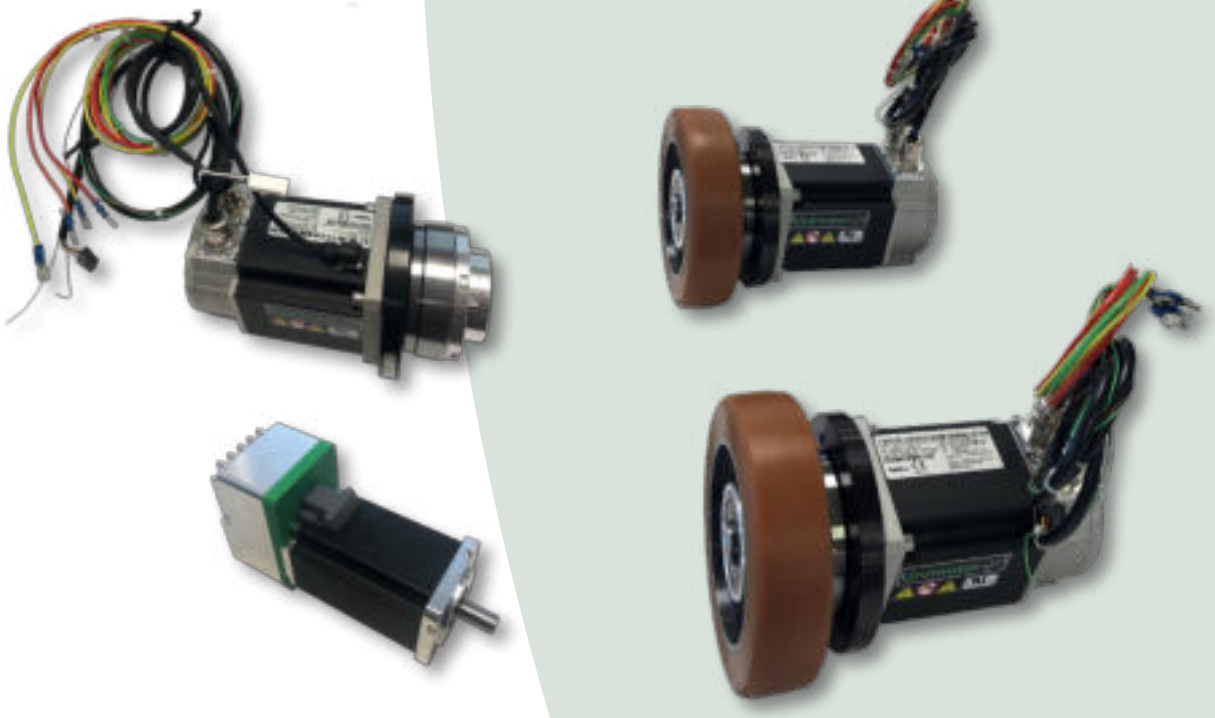

5.1.7 Quick reference table

Frame size	PCD (mm)	Low voltage											
067	075			1.45	3.70								
				0.30	0.75								
089	100				3.20				7.80				
						0.87	2.34						
115	130										8.0	10.2	
								2.42		4.41			
142	165											9.2	
													14.4
Stall	(Nm) 0		1.0	2.0	3.0	4.0	5.0	6.0	7.0	8.0	9.0	10.0	11.0
Inertia	(kg.cm2) 0		0.2	0.3	0.5	0.8	1.0	2.4	2.5	3.0	4.0	15.0	20.0

5.1.8 Conformance and standards

RoHS Compliant

5.2 ORDERING INFORMATION

5.2.1 UNIMOTOR HD EXTRA LOW VOLTAGE ORDERING INFORMATION - D + 10 LEAD TIME

Use the information below in the table to create an order code for a extra low voltage motor.

067	LD	B	30	0	F
Frame size	Motor voltage	Stator length	Rated speed	Brake	Connection type
	067 - 142 frame	067 frame	067 frame	067 - 142 frame	Size 1
067	**LD** = 48V	**A / B / C**	**20** = 2000 rpm	**0** = Not fitted (Std)	**B** = Power and signal 90° rotatable (Optional)
089		089 frame	**30** = 3000 rpm	**6** = Parking Brake (Resin)	**F** = Flying leads (0.5m Standard)
115		**A / B / C**	**60** = 6000 rpm		
142		115 frame	089 frame		
		A / B	**10** = 1000 rpm		
		142 frame	**20** = 2000 rpm		
		A	**30** = 3000 rpm		
			115 frame		
			10 = 1000 rpm		
			20 = 2000 rpm		
			142 frame		
			10 = 1000 rpm		
			20 = 2000 rpm		

GEARBOX SUFFIX*

Motors requiring gearboxes must have the pcd/shaft and a special code at the end of the part number as per definitions below:-

e.g. 067LDA200FACAC**080220-GSAI**

PCD / SHAFT
VRLZ-090
100620
VRLZ-120
165900
VRL-090
080220
VRL-120
108320
VRL-155
140400

Type	Ordering Code
VRLZ-090 (9:1)	**GSFK** *Compatible for 067, 089 and 115 frames*
VRLZ-120 (9:1)	**GSFL** *Compatible for 089, 115 and 142 frames*
VRL-090 (10:1)	**GSAI** *Compatible for 067, 089 and 115 frames*
VRL-120 (10:1)	**GSAO** *Compatible for 089, 115 and 142 frames*
VRL-155 (10:1)	**GSAU** *Compatible for 115 and 142 frames*

*Gearboxes are not to be sold separately

Note: for detailed gearbox information please refer to section 4.4, page 52.

A	CR		C
Output shaft	**Feedback device**		**Inertia**
067 - 142 frame	**067 frame**		**067 - 142 frame**
A = Key	**CR** = Incremental Encoder	R35i	**C** = Standard + KTY thermistor (KTY84)
F = Key and half key supplied separately	**089 - 142 frame**		
	CA = Incremental Encoder	CFS50	

5.3 DIMENSIONS & RATINGS

5.3.1 Frame size 067

Motor frame size (mm)		067LD		
Voltage (Vrms)		40 - 50		
Frame length		A	B	C
Continuous stall torque (Nm)		1.45	2.55	3.70
Peak torque (Nm)		4.40	7.70	11.10
Standard inertia (kgcm²)		0.30	0.50	0.75
Winding thermal time constant (sec)		54.0	61.0	65.0
Standard Motor weight (kg)		2.00	2.60	3.20
Number of poles		10	10	10
Speed 2,000 (rpm)	Kt (Nm/A) =	0.21		
	Ke (V/krpm) =	12.8		
Rated torque (Nm)		1.40	2.50	3.60
Stall current (A)		6.90	12.20	17.70
Rated power(kW)		0.30	0.52	0.80
R (ph-ph) (Ohms)		0.59	0.22	0.14
L (ph-ph) (mH)		1.70	0.80	0.60
Standard Connection		Flying Leads		
Optional power conn' size		1	1	1
Speed 3,000 (rpm)	Kt (Nm/A) =	0.14		
	Ke (V/krpm) =	8.5		
Rated torque (Nm)		1.40	2.50	tba
Stall current (A)		10.40	18.30	tba
Rated power(kW)		0.44	0.77	tba
R (ph-ph) (Ohms)		0.27	0.11	tba
L (ph-ph) (mH)		0.80	0.40	tba
Standard Connection		Flying Leads		tba
Optional power conn' size		1	♦	♦
Speed 6,000 (rpm)	Kt (Nm/A) =	0.07		
	Ke (V/krpm) =	4.3		
Rated torque (Nm)		1.30	♦	♦
Stall current (A)		20.70	♦	♦
Rated power(kW)		0.82	♦	♦
R (ph-ph) (Ohms)		0.08	♦	♦
L (ph-ph) (mH)		0.20	♦	♦
Standard Connection		Flying Leads	♦	♦
Optional power conn' size		♦	♦	♦

♦ *not available*

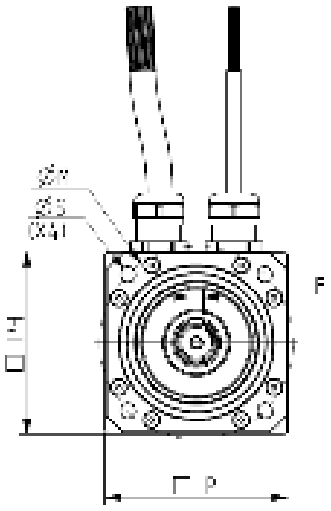

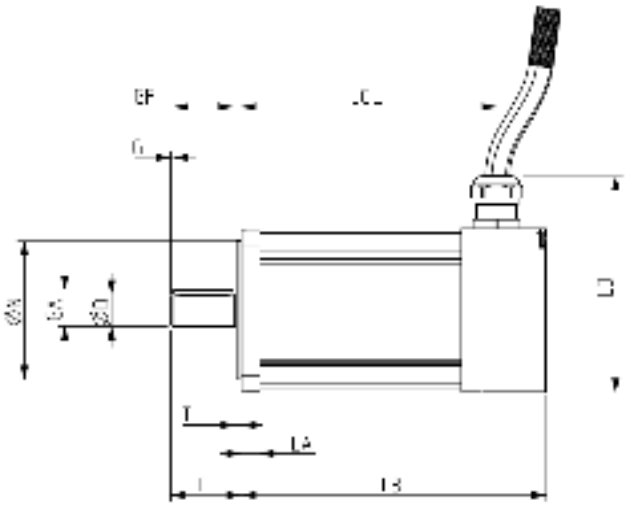

Δt= 100 °C winding 40 °C maximum ambient
All data subject to ± 10 % tolerance
Stall torque, rated torque and power relate to maximum continuous operation tested in a 20 °C ambient at **12 kHz drive switching frequency**
All other figures relate to a 20 °C motor temperature
Maximum Intermittent winding temperature is 140°C

Motor dimensions (mm) Note all dimensions shown are at nominal

	Feedback CR				Flange thickness	Register length	Register diameter	Overall height	Flange square	Fixing hole diameter	Fixing hole PCD	Motor housing	Mounting bolts
	Unbraked length		Braked length										
	LB (± 0.9)	LC (± 1.0)	LB (± 0.9)	LC (± 1.0)	LA (± 0.5)	T (± 0.1)	N (j6)	LD (± 0.3)	P (± 0.3)	S (H14)	M (± 0.5)	PH (±0.5)	
067A	142.9	109.0	177.9	144.0	7.7	2.5	60.0	111.5	70.0	5.8	75.0	67.0	M5
067B	172.9	139.0	207.9	174.0									
067C	202.9	169.0	237.9	204.0									

Shaft dimensions (mm)

	Shaft diameter	Shaft length	Key height	Key length	Key to shaft end	Key width	Tapped hole thread size	Tapped hole depth
	D (j6)	E	GA	GF	G	F (h9)	I	J (± 1.0)
14.0 (Std)	14.0	30.0	16.0	25.0	1.5	5.0	M5 x 0.8	13.5

5.3.2 Frame size 089

Motor frame size (mm)		089LD		
Voltage (Vrms)		40 - 50		
Frame length		A	B	C
Continuous stall torque (Nm)		3.20	5.50	8.00
Peak torque (Nm)		9.60	16.5	24.0
Standard inertia (kgcm²)		0.87	1.61	2.34
Winding thermal time constant (sec)		85.0	93.0	98.0
Standard Motor weight (kg)		3.18	4.28	5.50
Number of poles		10	10	10
Speed 1,000 (rpm)	Kt (Nm/A) =	0.42		
	Ke (V/krpm) =	25.6		
Rated torque (Nm)		3.20	5.25	7.80
Stall current (A)		7.62	13.10	19.0
Rated power(kW)		0.33	0.55	0.82
R (ph-ph) (Ohms)		0.56	0.22	0.14
L (ph-ph) (mH)		3.70	1.70	1.10
Standard Connection		Flying Leads		
Optional power conn' size		1	1	♦
Speed 2,000 (rpm)	Kt (Nm/A) =	0.21		
	Ke (V/krpm) =	12.8		
Rated torque (Nm)		3.10	5.00	tba
Stall current (A)		15.3	26.3	tba
Rated power(kW)		0.65	1.05	tba
R (ph-ph) (Ohms)		0.14	0.06	tba
L (ph-ph) (mH)		0.90	0.50	tba
Standard Connection		Flying Leads		tba
Optional power conn' size		1	♦	♦
Speed 3,000 (rpm)	Kt (Nm/A) =	0.14		
	Ke (V/krpm) =	8.5		
Rated torque (Nm)		3.00	♦	♦
Stall current (A)		23.0	♦	♦
Rated power(kW)		0.94	♦	♦
R (ph-ph) (Ohms)		0.08	♦	♦
L (ph-ph) (mH)		0.50	♦	♦
Standard Connection		Flying Leads	♦	♦
Optional power conn' size		♦	♦	♦

♦ *not available*

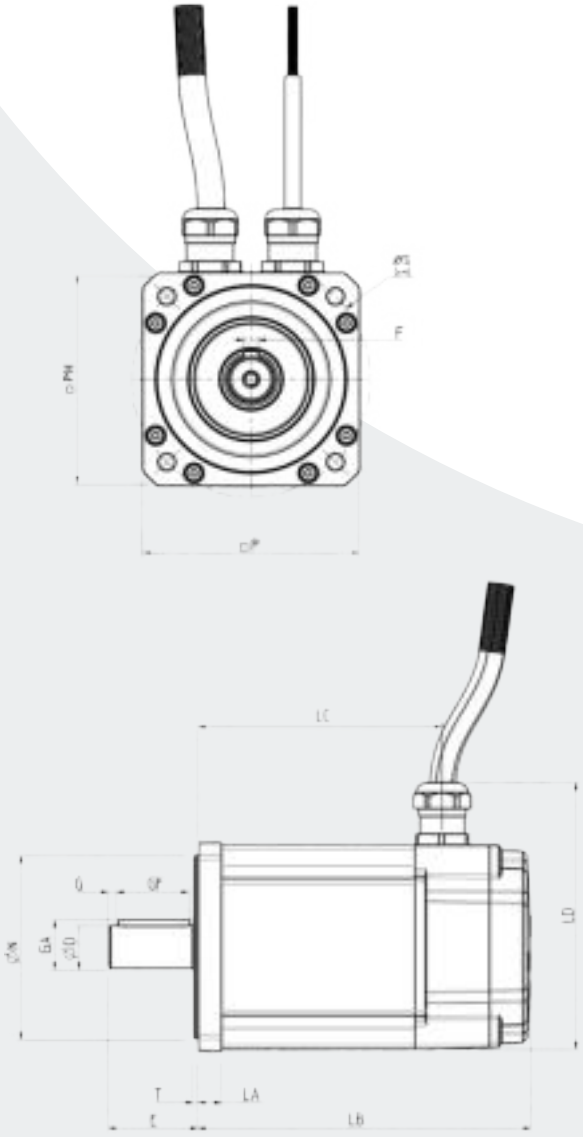

Δt= 100 °C winding 40 °C maximum ambient
All data subject to ± 10 % tolerance
Stall torque, rated torque and power relate to maximum continuous operation tested in a 20 °C ambient at **12 kHz drive switching frequency**
All other figures relate to a 20 °C motor temperature
Maximum Intermittent winding temperature is 140°C

Motor dimensions (mm) Note all dimensions shown are at nominal

	Feedback CA				Flange thickness	Register length	Register diameter	Overall height	Flange square	Fixing hole diameter	Fixing hole PCD	Motor housing	Mounting bolts
	Unbraked length		Braked length										
	LB (± 0.9)	LC (± 1.0)	LB (± 0.9)	LC (± 1.0)	LA (± 0.5)	T (± 0.1)	N (j6)	LD (± 0.3)	P (± 0.3)	S (H14)	M (± 0.5)	PH (±0.5)	
089A	160.8	123.5	200.9	163.6	10.3	2.2	80.0	130.5	91.0	7.0	100.0	89.0	M6
089B	190.8	153.5	230.9	193.6									
089C	220.8	183.5	260.9	223.6									

Shaft dimensions (mm)

	Shaft diameter	Shaft length	Key height	Key length	Key to shaft end	Key width	Tapped hole thread size	Tapped hole depth
	D (j6)	E	GA	GF	G	F (h9)	I	J (± 1.0)
19.0 (Std)	19.0	40.0	21.5	32.0	3.7	6.0	M6 x 1.0	17.0

5.3.3 Frame size 115

Motor frame size (mm)		115LD	
Voltage (Vrms)		40 - 50	
Frame length		A	B
Continuous stall torque (Nm)		8.00	10.2
Peak torque (Nm)		24.0	30.6
Standard inertia (kgcm²)		2.42	4.41
Winding thermal time constant (sec)		160.0	164.0
Standard Motor weight (kg)		5.13	7.00
Number of poles		10	10
Speed 1,000 (rpm)	Kt (Nm/A) =	0.42	
	Ke (V/krpm) =	25.6	
Rated torque (Nm)		7.50	9.40
Stall current (A)		19.0	24.3
Rated power(kW)		0.79	0.98
R (ph-ph) (Ohms)		0.28	0.10
L (ph-ph) (mH)		2.20	0.90
Standard Connection		Flying Leads	
Optional power conn' size		♦	♦

♦ *not available*

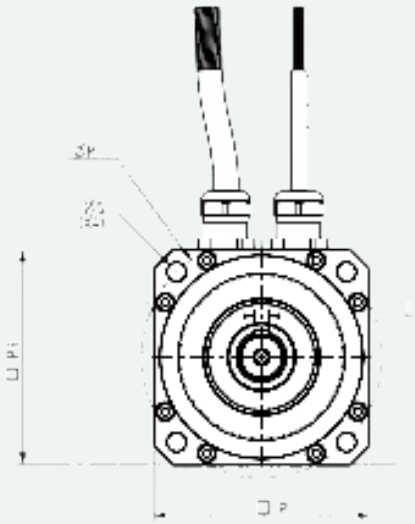

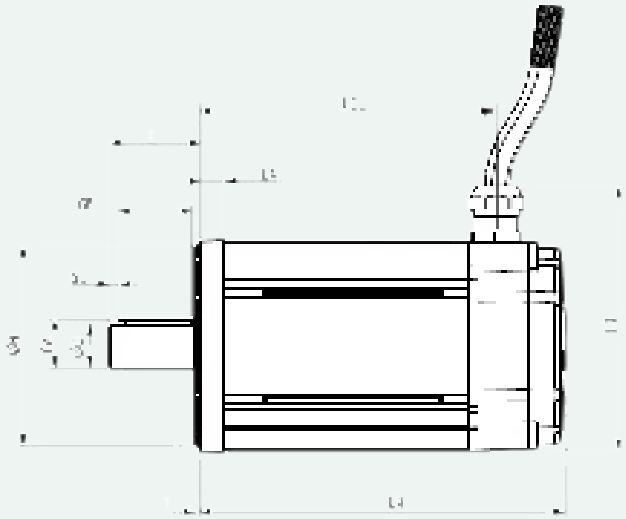

Δt= 100 °C winding 40 °C maximum ambient
All data subject to ± 10 % tolerance
Stall torque, rated torque and power relate to maximum continuous operation tested in a 20 °C ambient at **12 kHz drive switching frequency**
All other figures relate to a 20 °C motor temperature
Maximum Intermittent winding temperature is 140°C

Motor dimensions (mm) Note all dimensions shown are at nominal

	Feedback CA				Flange thickness	Register length	Register diameter	Overall height	Flange square	Fixing hole diameter	Fixing hole PCD	Motor housing	Mounting bolts
	Unbraked length		Braked length										
	LB (± 0.9)	LC (± 1.0)	LB (± 0.9)	LC (± 1.0)	LA (± 0.5)	T (± 0.1)	N (j6)	LD (± 0.3)	P (± 0.3)	S (H14)	M (± 0.5)	PH (±0.5)	
115A	176.8	137.0	213.9	174.1	13.2	2.7	110.0	156.5	116.0	10.0	130.0	115.0	M8
115B	206.8	167.0	243.9	204.1									

Shaft dimensions (mm)

	Shaft diameter	Shaft length	Key height	Key length	Key to shaft end	Key width	Tapped hole thread size	Tapped hole depth
	D (j6)	E	GA	GF	G	F (h9)	I	J (± 1.0)
24.0 (Std)	24.0	50.0	27.0	40.0	5.3	8.0	M8 x 1.25	20.0

5.3.4 Frame size 142

Motor frame size (mm)		142LD
Voltage (Vrms)		40 - 50
Frame length		A
Continuous stall torque (Nm)		9.20
Peak torque (Nm)		27.6
Standard inertia (kgcm²)		14.4
Winding thermal time constant (sec)		235
Standard Motor weight (kg)		7.44
Number of poles		10
Speed 2,000 (rpm)	Kt (Nm/A) =	0.21
	Ke (V/krpm) =	12.8
Rated torque (Nm)		8.60
Stall current (A)		51.7
Rated power(kW)		1.80
R (ph-ph) (Ohms)		0.02
L (ph-ph) (mH)		0.22
Standard Connection		Flying Leads
Optional power conn' size		♦

♦ *not available*

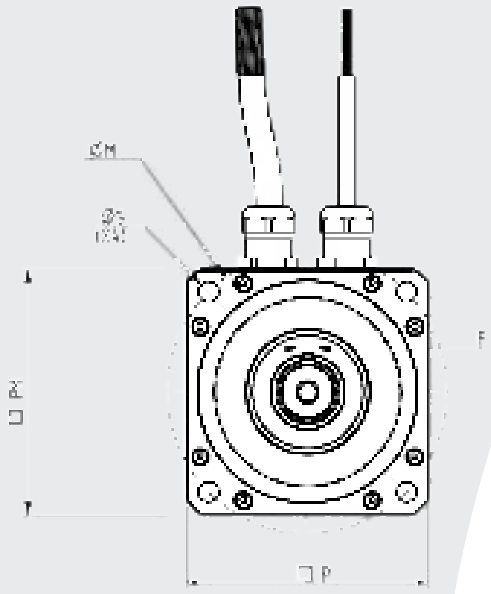

Δt= 100 °C winding 40 °C maximum ambient
All data subject to ± 10 % tolerance
Stall torque, rated torque and power relate to maximum continuous operation tested in a 20 °C ambient at **12 kHz drive switching frequency**
All other figures relate to a 20 °C motor temperature
Maximum Intermittent winding temperature is 140°C

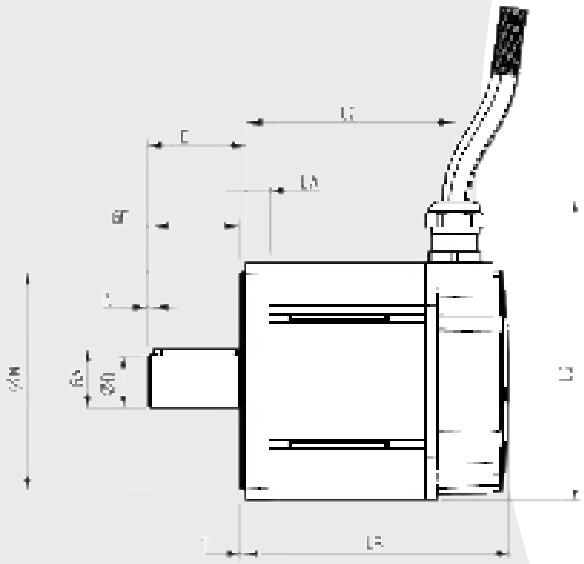

Motor dimensions (mm) Note all dimensions shown are at nominal

	Feedback CA				Flange thickness	Register length	Register diameter	Overall height	Flange square	Fixing hole diameter	Fixing hole PCD	Motor housing	Mounting bolts
	Unbraked length		Braked length										
	LB (± 0.9)	LC (± 1.0)	LB (± 0.9)	LC (± 1.0)	LA (± 0.5)	T (± 0.1)	N (j6)	LD (± 0.3)	P (± 0.3)	S (H14)	M (± 0.5)	PH (±0.5)	
142A	157.3	122.5	255.8	221.0	14.0	3.4	130.0	183.5	142.0	12.0	165.0	142.0	M10

Shaft dimensions (mm)

	Shaft diameter	Shaft length	Key height	Key length	Key to shaft end	Key width	Tapped hole thread size	Tapped hole depth
	D (j6)	E	GA	GF	G	F (h9)	I	J (± 1.0)
32.0 (std)	32.0	58.0	35.0	50.0	3.0	10.0	M12 x 1.75	29.0

6 Generic information

6.1 PERFORMANCE DEFINITIONS

Stall torque

This is the maximum torque within the continuous zone at zero speed. Maximum continuous torque ratings may be intermittently exceeded for short periods provided that the winding Δt max temperature is not exceeded.

Δt max = 100 °C over a maximum ambient of 40 °C for Unimotor fm and Unimotor hd.

Stall current

Stall current = Stall torque / Kt

Motor label and performance tables quote stall current when motor is at full power in a maximum ambient of 40 °C.

Rated speed

This is the maximum speed of the motor within the continuous zone. The motor speed can be controlled to any speed subject to the voltage limits and drive constraints as shown by the intermittent zone on a motor performance graph

Ke voltage constant

This is the phase to phase rms voltage generated at the stator when the shaft is back driven at 1,000 rpm with the rotor at 20 °C.

Kt torque constant

A brushless motor delivers torque proportional to the current, such that torque = Kt x current.

Where Kt = 0.0165 x Ke (at 20 °C).

Magnets used on all motors are affected by temperature such that Ke and Kt reduce with increasing temperatures of the magnets. The reductions depends upon the magnet type and material grade used.

Winding thermal time constant

The thermal time constant of the winding with respect to the stator temperature as a reference in the exponential temperature rise given by the formula:

Winding temperature at time t seconds = T0+T1 (1-e-t/tc)

Where T0 is the initial temperature, T1 is the final winding temperature and tc = thermal time constant (seconds)

Note that temperature = 63.2 % of T1 when t = tc

A thermal protection trip is provided by the drive, based upon calculations using elapsed time, current measurement, and the parameter settings set by the user or directly from the motor map.

Unimotor hd windings are ultimately protected by thermistor devices in the winding overhangs. These must be connected to the appropriate drive inputs via the motor feedback signal connector.

Rated power

This is the product of the rated speed (radian/sec) and the rated torque (Nm) expressed in Watts (W).

Δt temperature

Δt temperature is the temperature difference between the copper wires of the motor winding and the ambient air temperature surrounding the motor.

The maximum Δt temperature permitted is 100 °C over a maximum ambient of 40 °C.
(i.e. a maximum winding temperature of 140 °C)

6.2 MOTOR DERATING

Any adverse operating conditions require that the motor performance be derated. These conditions include: ambient temperature above 40 °C, motor mounting position, drive switching frequency or the drive being oversized for the motor.

Ambient temperatures

The ambient temperature around the motor must be taken into account. For ambient temperatures above 40 °C the torque must be derated using the following formula as a guideline. (Note: Only applies to 2,000/3,000 rpm motors and assumes copper losses dominate.)

New derated torque
= Specified torque x $\sqrt{[1-((\text{Ambient temperature} - 40°C) / 100)]}$

For example with an ambient temperature of 76 °C the new derated torque will be 0.8 x specified value.

Thermal test conditions

The performance data shown has been recorded under the following conditions. Ambient temperature 20 °C, with the motor mounted on a thermally isolated aluminium plate as shown below.

Mounting arrangements

The motor torque must be derated if:

- The motor mounting surface is heated from an external source, such as a gearbox.
- The motor is connected to a poor thermal conductor.
- The motor is in a confined space with restricted air flow.

Drive switching frequency

Most Unidrive M and Digitax HD nominal current ratings are reduced for the higher switching frequencies. See the appropriate drive manual for details.

See the table below for the motor derate factors. These figures are for guidance only.

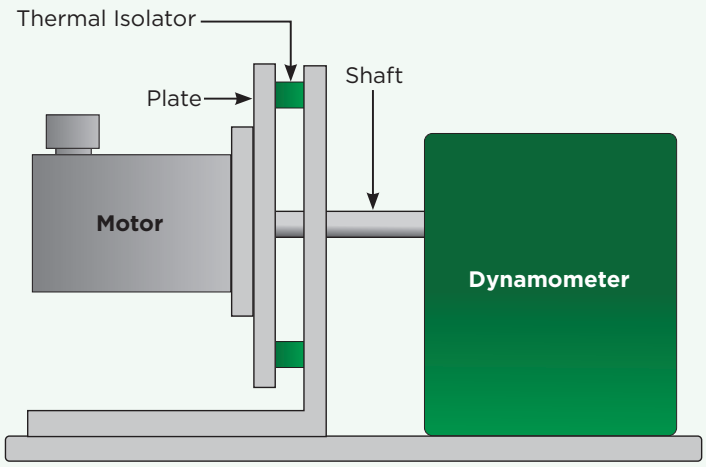

Motor type/frame	Aluminium heatsink plate
055 mm	110 x 110 x 27mm
067 - 095 mm	250 x 250 x 15mm
115 - 142 mm	350 x 350 x 20mm
190 - 250 mm	500 x 500 x 20mm

6.2.1 Unimotor hd derate factors

Switching frequency	055	067	089	115	142	190
3kHz	0.92	0.93	0.89	0.89	0.83	0.90
4kHz	0.93	0.94	0.91	0.92	0.92	0.95
6kHz	0.95	0.95	0.95	0.96	0.96	1
8kHz	0.96	0.98	0.97	0.98	0.98	1
12/16kHz	1	1	1	1	1	1

6.2.2 Unimotor fm derate factors

Switching frequency	075	095	115		142		190		250
	A-D	A-E	A-C	D-E	A-C	D-E	A-B	C-H	D-F
3kHz	0.93	0.88	0.89	0.84	0.87	0.81	0.98	n/a	0.88
4kHz	0.94	0.91	0.91	0.84	0.91	0.86	0.99	0.55	0.90
6kHz	0.95	0.93	0.93	0.90	0.94	0.89	0.99	0.77	0.94
8kHz	0.98	0.91	0.97	0.95	0.97	0.96	1	0.90	0.98
12/16kHz	1	1	1	1	1	1	1	1	1

6.3 NAMEPLATE DEFINITIONS

Model Full part number of the motor

3Ø Indicates this is a 3 phase motor

POLE Number of poles: **(hd)** 055 = 8 poles – 4 pole pairs, 067-190 = 10 poles – 5 pole pairs. **(fm)** 075-142 = 6 poles - 3 pole pairs, 190 = 8 poles - 4 pole pairs, 250 = 10 poles - 5 pole pairs

Insul Windings are built to class F (155 °C)

F/B This gives the feedback device, count and working voltage or the feedback type

S/N/DATE The serial number and date the motor was manufactured

IP Ingress protection rating IP 65S

Mcs The stall torque at stall current

Mn The rated torque of the motor

Ke This is the AC Volts per 1,000 rpm with the motor at 20 °C

Kt Value shown is for the magnet's temperature at 20 °C

Ics The constant stall current at the maximum winding temperature of 140 °C

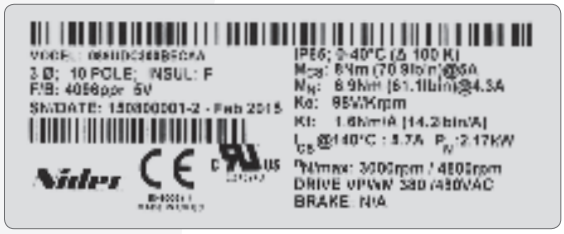

Pn The rated power of the motor

nN/max The rated speed/ this is the maximum speed allowed when taking into account these three factors:

1) Maxdrive voltage

2) Maxencoder speed

3) Maxmechanical speed

VPWM This indicates that the motor is for use with a voltage pulse width modulated drive with the supply voltage shown

Brake The current, that rated torque and the operation voltage for the brake or N/A if the brake is not fitted

6.4 MOTOR SELECTION

A reliable servo system depends upon the initial system design and correct selection of the motor, feedback, gearbox and drive. To ensure success careful attention should be paid to the following points:

- Speed, acceleration and inertia
- Peak and rms torque
- Motor feedback type
- Gear ratios
- Drive system operational mode
- Thermal effects
- Environmental conditions
- Mechanical restrictions
- Cost of motor-drive combination

It is necessary to estimate the root mean square (rms) torque value of the load. Where the motor has varying duty cycles it may be necessary to consider the worst case only.

Never exceed the maximum peak torque ratings.

Calculate the rms load torque at the motor and ensure that this is less than the motor rated torque. An additional allowance should be made on the load for inefficiencies and tolerance.

Choose a suitable motor within the size limitations of the installation. The frame size and motor speed may be selected using the performance data. Look for the rated torque at the appropriate temperature.

6.5 CHECKLIST OF OPERATING DETAILS

Complete this checklist to help select which Unimotor best suits your application requirements.

Torque speed

- What motor operating speed do you require (rpm)?
  - 1.000
  - 1.500
  - 2,000
  - 2,500
  - 3,000
  - 4,000
  - 6,000
  - Other (non standard speed)
- What is the rms torque?
  Decide on switching frequencies for the drive, and derate motor or drive accordingly
- If the ambient temperature is above 40 °C, apply a derating factor. If the motor is mounted to a hot interface; or interfaced with a low thermal mass; or high thermal resistance; apply a derating factor. Torque ratings of motors are stated in controlled conditions mounted on a reference front plate. Details can be found in the Performance data selection.
- Inertia mismatch (ratio of the motor inertia to load inertia reflected to motor shaft) can be as high as 3:1 for acceleration rates of 1,000 rad/s^2 for a typical system. Larger mismatches or acceleration can be tolerated with a rigid mechanical system and high resolution feedback.
- Do you require a brake?

Motor mounting

- Does the motor fit the machine?
  Make allowances for cables and connections.
- Do you require an output key?
  - Output key
  - Plain shaft

Feedback

- Do you want an encoder or resolver?
  - Incremental
  - SinCos Multi turn
    - SICK Hiperface
    - Heidenhain EnDat
    - Inductive absolute
    - High accuracy
  - SinCos Single turn
    - SICK Hiperface
    - Heidenhain EnDat
    - Inductive
    - High accuracy
  - Resolver

Electrical connections

- Connectors
  - Power and Signal 90 ° rotatable
  - Power 90 ° rotatable and Signal vertical
  - Power and Signal vertical
  - Power and Signal combined
  - Hybrid/Terminal box

Other options

- Do you require a gearbox?
  - Yes see gearbox selection, page 52.
  - No
- Many other customer special motors are made by Control Techniques Dynamics.
  For further details, contact us.

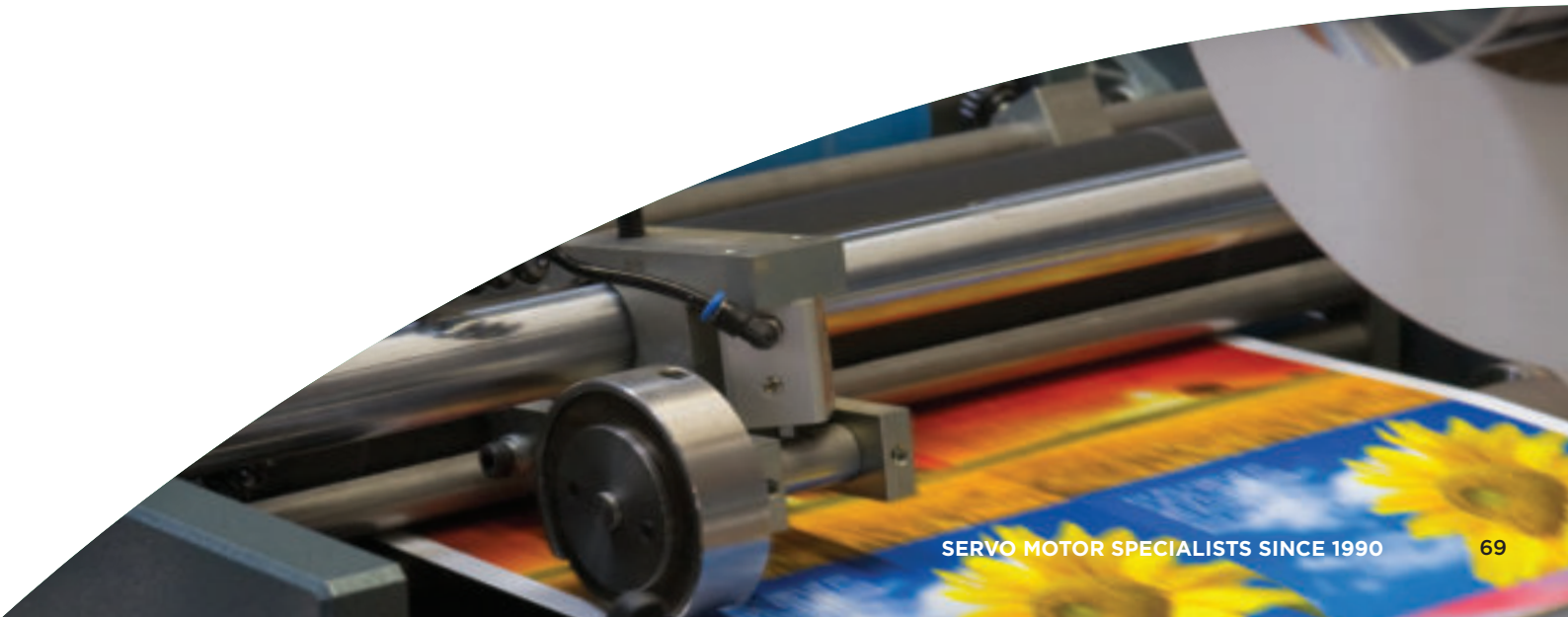

6.6 OTHER POINTS TO CONSIDER

Torque and temperature

- The maximum allowable temperature of the motor windings or feedback device should not be exceeded. The windings have a thermal time constant ranging from 90 seconds to over an hour. Dependent upon motor temperature the motor can be overdriven for shorter periods without exceeding the temperature limitations. The motor winding thermal time constant should be set-up in the drive; this parameter is used for thermal shock (I^2t) calculations within the drive.
- The motor winding thermal time constant should be large in comparison with the medium term periods of high rms torque.
- Ensure that the drive's features, such as switching frequency, waveforms, peak and continuous currents are suitable for the application. Low switching frequencies of the drive will require motor derating.
- Torque estimates should include friction and acceleration (and hence inertia) calculations.
- Consider the motor cooling effects; for example, is the conductive thermal path adequate?. Is the motor mounted on a gearbox or heat source?.
- Ensure that the motor and drive can meet the short term peak torque requirements.

Braking

- The installation may require static parking brake.

Inertia

- Ensure that the motor has correct inertia matching to suit the acceleration requirements. Consider inertia load matching especially for acceleration levels above 1,000 rad/s^2. Motors with larger frame diameters have higher inertia. Higher inertia rotor options are available.

Environmental conditions

- Other environmental factors, such as vibration, pressure, shock, heat and hazardous zones should be considered.

Cables

- The cable lengths required for the installation should be considered. For maximum cable length, see the Maximum cable length table in the Cable section on P139. Compliance with both Safety and EMC regulations should be ensured.
- Ensure motor is mounted firmly and properly earthed. Screen all cables to reduce system noise and EMC

Feedback

- To achieve an efficient system it is necessary to ensure stiff mechanical connections and couplings to all rotating parts, so that a high servo bandwidth can be achieved. This will improve stability and enable higher servo gains to be set, ensuring higher accuracy and positional repeatability.
- High resolution feedbacks will increase stability and allow greater acceleration or inertia mismatch.

Bearing loads

- Check the radial and axial loadings are within the limits of the motor.

6.7 SPECIAL MOTOR REQUESTS

Control Techniques Dynamics offer many "special" motors. These motors are designed to meet a specific customer's requirements.

Special motors are denoted by a code on the end of the part number. S*** 3 or 4 digits; e.g. 115U3E100BACAA115240-SON (special coating)

To request a "special" motor please contact Control Techniques Dynamics with the customer requirements. A product enquiry form will be raised and R&D/Engineering will investigate the feasibility of the request. If acceptable then a "special" part number reference will be allocated to the motor and a quote will be issued.

Once an order is placed a Product Approval Schedule (PAS) form will be raised and sent to the Drive Center for approval.

Special motors can include:

- Special paint finishes or unpainted motors.
- Special motors with customer specific connector wiring.
- Special motors with customer specific brakes.
- Special motors with customer specific shaft dimension.
- Special motors for harsh environments motors.

6.8 CALCULATING LOAD TORQUE

In any application, the load consists of various torque loads plus acceleration and decelerations of inertia.

Constant torque periods

Periods where a torque is maintained at constant or near constant motor speeds.

Acceleration and deceleration

Torque is required to achieve acceleration and deceleration. Acceleration times of less than one second can often be achieved using peak torque capability of the drive and motor.

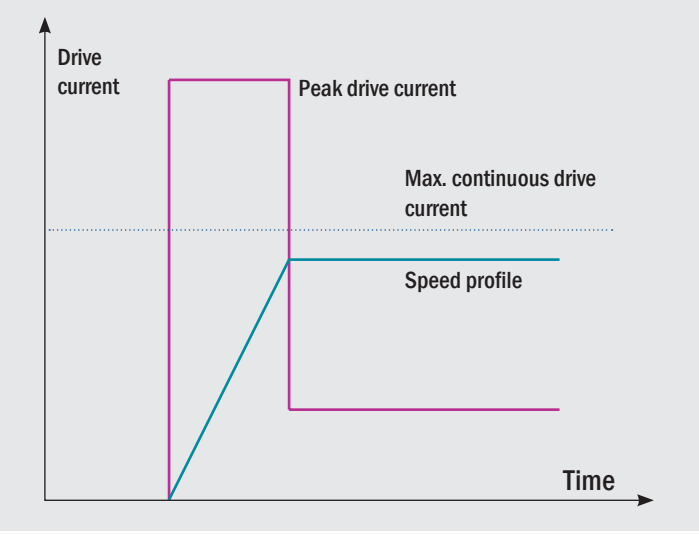

Note

Peak drive current may be set by drive control to the motors continuous current rating. If this is required, check that it is within the drives capability. Medium periods of up to 200 % over current are often acceptable for the motor, provided that the heating effects are not too rapid and that the motor thermal time constant is long in comparison.

Inertia formula and accelerating or decelerating torques:

Inertial loads on a common shaft may be added together. Inertial loads may be reflected from the output of a reduction gearbox to the motor by dividing the output ratio by the square of the ratio.

Total inertia = reflected inertial load at motor + motor inertia

rms torque for a repetitive duty cycle:

Draw a graph of torque (T) against time for one complete repetitive cycle of events (or choose the worst case of various events). Make the torque axis vertical. On the same graph, draw the speed profile against time for one cycle.

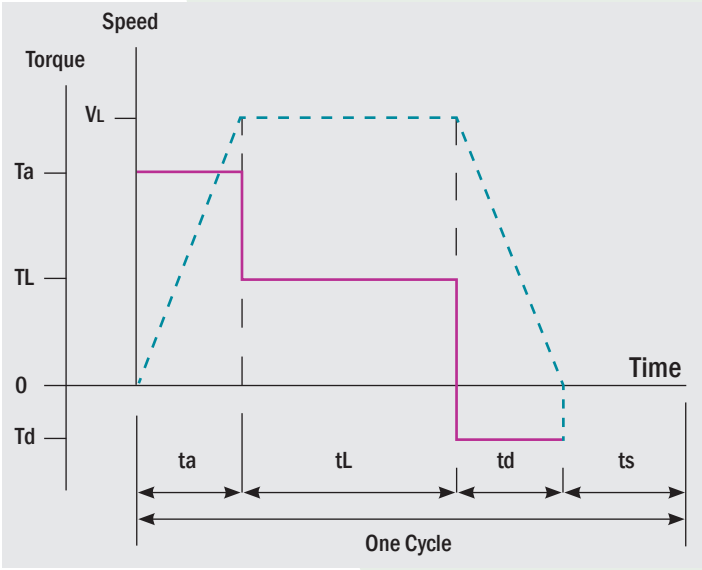

From the above speed-torque diagram calculate the rms torque using the formula:

$$Trms = \sqrt{\frac{Ta^2 \times ta + TL^2 \times tL + Td^2 \times td \times Ts^2 \times ts}{ta + tL + td + ts}}$$

Where:

Ta = Acceleration Torque (Nm)
TL = Load torque (Nm)
Td = Deceleration torque (Nm)
ta = Acceleration Time (s)
Ts = Dwell torque (Nm=0)
tL = On load running time (s)
td = Deceleration time (s)
ts = Dwell time (s)
VL = Full load speed (rpm)

Example

In an application where the torque speed profile is as above with **Ta** = 20 Nm, **TL** = 5 Nm, **Td** = -10 Nm, **ta** = 20 ms, **tL** = 5 s, **td** = 30 ms, **ts** = 3 s, **VL** = 3,000 rpm, **Ts** = 0 calculate the rms torque for this application.

$$Trms = \sqrt{\frac{20^2 \times 0.02 + 5^2 \times 5 + 10^2 \times 0.03 \times 0^2 \times 3}{0.02 + 5 + 0.03 + 3}}$$

$$Trms = \sqrt{\frac{136}{8.05}}$$

Trms = 4.11 Nm

15 % tolerance required hence the rms torque for this application = **4.73 Nm**

6.9 UNDERSTANDING MOTOR HEATING EFFECTS

During operation, the motor is subjected to heating effects from several sources. Some of these are obvious; others obscure. Whilst the motor specification allows for most of these heating effects, others depend on the application. This section examines some of the causes of motor heating.

Motor copper losses

Motor copper loss is a product of the rms current squared and the resistance of the motor windings. It includes ripple currents, determined by the switching frequency of the drive and the inductance of the motor. The inductance of the winding is generally low, so that the maximum drive frequencies should be selected commensurate with drive heating losses. Data in this manual is for switching frequencies as stated in the performance data section.
If lower frequencies are used, motor performance is reduced.

Motor copper loss also includes losses arising from waveform distortions of either the drive or motor or both. The motor's back EMF waveform is sinusoidal and of low harmonic distortion. If lower frequencies are used, the drive current has higher distortion and hence the motor performance is reduced.

Motor current depends on the torque demanded by the load at any instant. This is normally given by the motor torque constant (Kt) in Nm/A. Although regarded as a constant, Kt decreases slightly when the motor is at maximum temperature.

The Ke for a brushless three phase motor is always quoted Volts(rms) per krpm, since the motor back EMF is sinusoidal.

Motor iron losses

Motor iron loss is a heating effect produced in the motor laminations. It is caused by the rotating magnetic field cutting through the laminations, the higher the speed the higher the losses. For this reason the motor stall torque is greater than the motor rated torque at speed.

Iron loss depends on the strength of the magnetic field and type of laminations material.

Friction and windage

The bearings, oil seals and the air resistance to rotor speed cause internal friction. Its effect is relatively small and is included in the data provided.

Thermal protection

An incorrect system set up can give rise to excessive motor temperatures. This can be guarded against by the use of the motor thermistor protection facility.

Servo motor/drive system faults

Common but often unnoticed causes of motor overheating can be created by:

- Instability (self induced oscillation) within the overall servo feedback system
- Incorrect parameter settings in the drive protection system, for example peak current, and I^2t (thermal protection calculation for the drive)

The increase in resistance is measured by the drive and a "th trip" will occur. Only once the motor has cooled can the trip be cleared.

The installer must connect the motor thermistor to the drive to cause motor power shutdown in the event of overheating.

It is the installer's responsibility to ensure that this protection facility is properly connected and set at the drive.

Failure to ensure the correct operation of the protection facility invalidates the warranty in respect of a burnt out winding.

The ambient temperature of the environment into which the Unimotor is mounted must be considered.

Unimotor PTC 145 °C

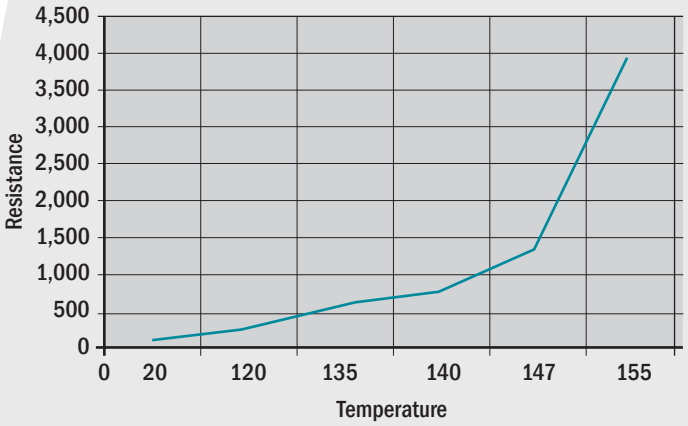

Thermistor protection

A PTC thermistor rated to 145 C, is built into the motor windings and is used to protect the motor against overheating problems.

The device remains a low resistance until a critical temperature is reached, where it will then switch to a very high resistance.

Unimotor KTY 84 -130 °C

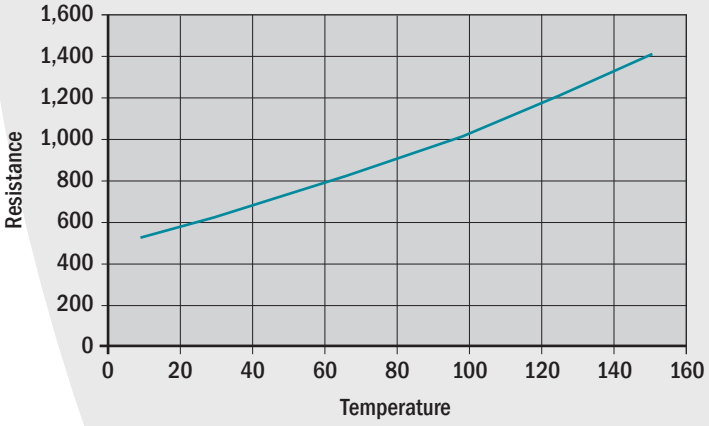

KTY protection

A KTY 84-130 temperature sensors is built into the motor windings and is used to protect the motor against overheating problems. This device returns a resistance proportional to the winding temperature.

Fan boxes

The Unimotor fm range and the 115-190 hd motors can support a fan box unit, this can be retrofitted to the motor in the field and is used in applications where the motor's rated performance is not being exceeded and the fan box is used just to maintain a reduced motor temperature.

Fan Box units	Clearance distance behind fan box	Voltage	Free Air flow	Fan Current rating
075 motor	40mm	230V AC	50 m³/h	0.05A
095 motor	40mm	230V AC	67 m³/h	0.05A
115 motor	40mm	230V AC	160 m³/h	0.08A
142 motor	50mm	230V AC	180 m³/h	0.07A
190 motor	90mm	230V AC	325 m³/h	0.13A

Fan box wiring

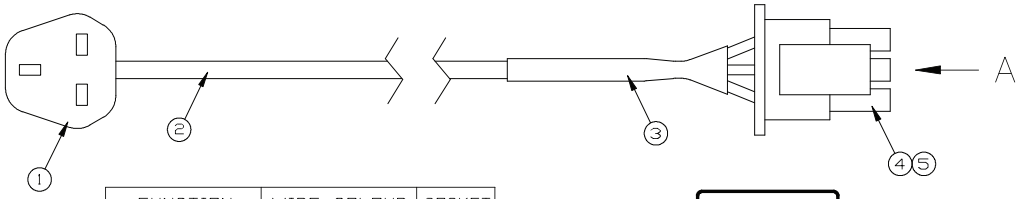

AMP - STANDARD

FUNCTION	WIRE COLOUR	SOCKET
N/C	–	1
N/C	–	2
N/C	–	3
NEUTRAL	BLUE	4
LIVE	BROWN	5
EARTH	GREEN	6

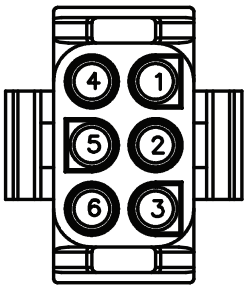

VIEW 'A'
OF CONNECTOR

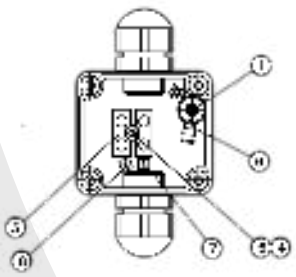

ITEM No.	PART NUMBER	DESCRIPTION	QTY
1			1
2			2
3			1
4			1
5			1
6			1
7			1
8			1

TERMINAL BOX - OPTIONAL

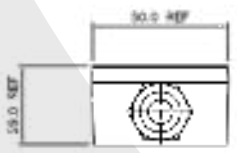

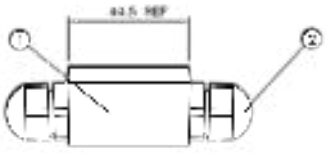

6.10 FEEDBACK SELECTION

Feedback device order code	Feedback type	Manufacturer	Encoder supply voltage	SinCos cycle or incremental pulses per revolution	Resolution available to position loop[2&3]	Absolute multi-turn revolutions	Feedback accuracy[1]	Single cable connector available[4]	Serial communication protocol	Frame size available
055 – 067 motors										
AR	Resolver	LTN RE – 15	7 Vdc Excitation 5kHz	1 Transformation ratio 0.5	Medium 16384 (14 bits)	-	Low +/- 600"	-	-	-
CR	Incremental Encoder	R35i	5 Vdc ± 10%	4096	Medium 16384 (14 bits)	-	Medium +/- 150"	-	-	-
EN (Multi-turn)	Optical EnDat Only	EQN 1135	3.6 - 14 Vdc	N/A	Very High 8.38 x 10^6 (23 bits)	4096 (12 bits)	High +/- 60"	-	EnDat 2.2 / EnDat 22	-
FN (Single-turn)		ECN 1123				-				
EG (Multi-turn)	Inductive EnDat Only	EQI 1131	3.6 - 14 Vdc	N/A	High 5.24 x 10^5 (19 bits)	4096 (12 bits)	Medium +/- 120"	6 wire HMC6	EnDat 2.2 / EnDat 22	-
FG (Single-turn)		ECI 1119				-				
TL (Multi-turn)	Optical Hiperface SinCos	SKM 36	7 – 12 Vdc	128	High 1.31 x 10^5 (17 bits)	4096 (12 bits)	Medium +/- 120"	-	Hiperface	-
UL (Single-turn)		SKS 36				-				
EM (Multi-turn)	Inductive EnDat SinCos	EQI 1130	5 Vdc ± 5%	16	High 2.62 x 10^5 (18 bits)	4096 (12 bits)	Low +/- 480"	6 wire HMC6	EnDat 2.1 / EnDat 01	-
FM (Single-turn)		ECI 1118				-				
075 – 250 motors										
AE	Resolver	Size 52	6 Vdc Excitation 6kHz	1 Transformation ratio 0.31	Medium 16384 (14 bits)	-	Low +/- 720"	-	-	-
CA	Incremental Encoder	CFS50	5 Vdc ± 10%	4096	Medium 16384 (14 bits)	-	High +/- 60"	-	-	-
EC (Multi-turn)	Inductive EnDat SinCos	EQI 1331	4.75 – 10 Vdc	32	High 5.24 x 10^5 (19 bits)	4096 (12 bits)	Medium +/- 380"	-	EnDat 2.1 / EnDat 01	Not available on 250 frames
FC (Single-turn)		ECI 1319				-				
EF (Multi-turn)	Inductive EnDat Functional Safety	EQI 1331 FS	3.60 – 14 Vdc	Serial Only	High 5.24 x 10^5 (19 bits)	4096 (12 bits)	High +/- 65"	6 wire HMC6	EnDat 2.2 / EnDat 22	-
FF (Single-turn)		ECI 1319 FS				-				
RA (Multi-turn)	Optical Hiperface SinCos	SRM 50	7 – 12 Vdc	1024	High 1.04 x 10^6 (20 bits)	4096 (12 bits)	High +/- 52"	-	Hiperface	-
SA (Single-turn)		SRS 50				-				
GB (Multi-turn)	Optical EnDat Only	EQN 1337	3.6 - 14 Vdc	N/A	Very High 3.35 x 10^7 (25 bits)	4096 (12 bits)	Very High +/- 20"	6 wire HMC6	EnDat 2.2 / EnDat 22	-
HB (Single-turn)		ECN 1325				-				
EB (Multi-turn)	Optical EnDat SinCos	EQN 1325	3.6 – 14 Vdc	2048	High 2.08 x 10^6 (21 bits)	4096 (12 bits)	Very High +/- 20"	-	EnDat 2.1 / EnDat 01	-
FB (Single-turn)		ECN 1313				-				
NA	Sensorless	-	-	-	-	-	-	-	-	fm only

[1] The information is supplied by the feedback device manufacturer and relates to it as a standalone device. The value may change when mounted into the motor and connected to a drive. These values have not been verified by Control Techniques Dynamics.

[2] The output from the resolver is an analogue output; the resolution is determined by the analogue to digital converter used; the value shown is when the resolver is used in conjunction with the SM-Resolver.

[3] The sin and cosine outputs from the SinCos optical encoders are analogue outputs; with Unidrive M and Digitax ST the resolutions quoted above are when the encoder type is set to either SC Endat or SC Hiperface depending on the encoder.

[4] To be ordered with single cable connector, see connector options. 6 wire HMC6 must be ordered with KTY 84-130 thermistor, see inertia options.

6.11 FEEDBACK TERMINOLOGY

Resolver

A passive wound device consisting of a stator and rotor elements excited from an external source, such as an SM-Resolver, the resolver produces two output signals that correspond to the Sine and CoSine angle of the motor shaft. This is a robust absolute device of low accuracy, capable of withstanding high temperature and high levels of vibration. Positional information is absolute within one turn - i.e. position is not lost when the drive is powered down.

Incremental encoder

An electronic device using an optical disc. The position is determined by counting steps or pulses. Two sequences of pulses in quadrature are used so the direction sensing may be determined and 4x (pulses per rev) may be used for resolution in the drive. A marker pulse occurs once per revolution and is used to zero the position count. The encoder also provides commutation signals, which are required to determine the absolute position during the motor phasing test. This device is available in 4096, 2048 and 1024 ppr versions. Positional information is non absolute - i.e. position is lost when the drive is powered down.

SinCos / absolute encoders

Types available are: Optical or Inductive - which can be single or multi-turn.

1) Optical

An electronic device using an optical disc. An absolute encoder with high resolution that employs a combination of absolute information, transmitted via a serial link, and Sine/CoSine signals with incremental techniques.

2) Inductive / Capacitive

An electronic device using inductively coupled PCB's. An absolute encoder with medium resolution that employs a combination of absolute information, transmitted via a serial link, and Sine/CoSine signals with incremental techniques. This encoder can be operated with the drive using either Sine/CoSine or absolute (serial) values only. Positional information is absolute within 4096 turns - i.e. position is not lost when the drive is powered down.

Multi-turn

As previous but with extra gear wheels included so that the output is unique for each shaft position and the encoder has the additional ability to count complete turns of the motor shaft up to 4096 revolutions.

Sensorless

Synchronous Rotor Flux Control. Recommended for use on the fm motor range. The motor performance will be limited when operating at low speed when using high frequency injection mode. When using closed loop vector mode the motor performance will be as stated in the ratings tables.

Environment

The environment is the external conditions that physically surround the feedback device. The main factors that affect the feedback device are temperature and mechanical shock and vibration.

Motors are designed to allow the feedback devices to be within their operational temperature limits. Generally it is assumed that there is free air movement around the motor. If the motor is positioned where there is little or no airflow or it is connected to a heat source such as a gearbox, it can cause the air temperature around the feedback device to be operating outside its recommended operating temperature and can lead to problems.

Mechanical shock and vibration tends to be transmitted from the load through the motor shaft and into the feedback device. This should be considered when the motor and feedback device are being specified for the application.

Position

The defined position is the location in a coordinate system which is usually in two or more dimensions.

For a rotary feedback device this is defined as the location within one revolution. If it is a multi-turn device it is the location within one revolution plus the location within a number of rotations.

For a linear feedback device this is defined as the distance from a known point.

Resolution

The resolution of a feedback device is the smallest change in position or angle that it can detect in the quantity that it is measuring.

Feedback resolution of the system is a function of the type of feedback device used and drive receiving the information.

Generally, as the resolution of the feedback device increases the level of control that can be used in the servo system increases.

As with accuracy, as the resolution of the device increases the cost increases.

Accuracy

Accuracy is the measure of the difference between the expected position and actual measured value. Rotary feedback accuracy is usually given as an angle representing the maximum deviation from the expected position. Linear feedback accuracy is usually given as a distance representing the maximum deviation from the expected.

Generally, as the accuracy increases the cost of the feedback device increases.

FEEDBACK TERMINOLOGY

Absolute Encoder

Absolute encoders output unique information for each mechanical measured position. With the motor shaft or plate in any position when the drive is turned on the feedback device will always be able to sense a unique position and transmit this value to the drive. For an absolute single turn rotary encoder these unique positions will be over one revolution.

When power is removed from the encoder and the shaft or plate moves the device will know its current position when the power is restored.

A non-absolute feedback mechanism must start from a known position, such as the index or marker pulse.

Serial Interface

Serial communication is available on some feedback devices. It is the process of sending data one bit at one time, sequentially, over a communication channel. The specification normally used to define this method of communication is the EIA485 specification. These can be synchronous, which means that they operate with additional clock channels. The main advantage of synchronous data transmission is that it can operate at high speed. A disadvantage is that if the receiver goes out of synchronization it can take time for it to resyncronize and data may be lost. Note that not all serial interfaces use the clock channels.

Serial interface communication allows data to be sent and received from the feedback device. In addition to the position and speed data other information can be sent such as multi-turn count, absolute position and diagnostic information.

Synchronous

If something is synchronous it means that events are coordinated in time. For serial interfaces this means that clock channels are used.

Asynchronous

If something is asynchronous it means that events are not coordinated in time. For serial interfaces this means that clock channels are not used.

Speed

Speed is the rate of change in position which can be either angular or linear traveled per unit of time. For rotational motors this is usually defined as revolutions per minute (rpm).

Volatile

Stored information will be lost when power is removed.

Non volatile

Stored information will not be lost when power is removed.

Bit

A bit is short for Binary Digit. It is the smallest unit of information in a machine/drive. A single bit has a binary value of either 0 or 1. These bits do not normally exist on their own, but usually in groups. The larger the number of bits in a group the larger the amount of information that is available and thus the higher the resolution. This group can be converted to decimal using binary arithmetic. The group of bits can be converted to decimal by starting at the right most bit and multiplying each successive bit to the left by two. So for example a 12 bit number would give a decimal equivalent of 4,096 and a 19 bit number would give a decimal equivalent of 524,288.

Electronic nameplate

Available on some feedback devices the electronic nameplate provides the facility to electronically store information about the motor and feedback device. This information can then automatically be used to configure the drive for operation.

Commutation

All brushless AC permanent magnet motors require commutation information to enable the drive to synchronize the stator flux field with the rotor of the motor.

To ensure optimum torque at all rotor positions both when stationary and at speed the drive is required to maintain motor current in phase with the peak of the motor's sinusoidal waveform. The drive must therefore know the position of the rotor with respect to the stator at all times.

Commutation phase offset

Most drives, including the Unidrive M and Digitax HD, provide a "Phase Offset" adjustment as a means of correctly setting the commutation position.

For feedback devices that are not aligned, the Unidrive M has an Encoder Phasing Test (Autotune) (Pr 5.012) that automatically creates a Phase Offset value (Encoder phase angle) (Pr 3.025).

All fm motor feedback devices are set to match the Unidrive M definition of zero phase offset, so that the drive may operate with zero phase offset adjustment, thus allowing interchange of motors between drives without further adjustment.

Note that not all drives have the same zero offset definition.

Commutation outputs

Commutation outputs are used on devices that are non-absolute. For AC Synchronous 3 phase motors there are 3 commutation output signal channels from the feedback device, for example S1, S2 and S3.

The diagram below shows commutation outputs for 6 pole commutation (3 pole pairs). The 3 phase motor sinusoidal power from the drive runs synchronously with motor speed at N/2 cycles per revolution;

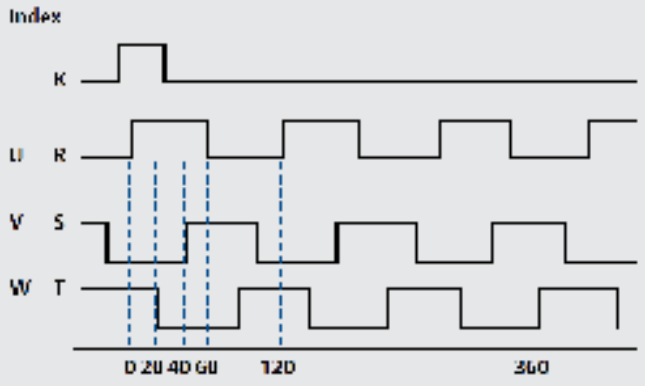

Where N = number of poles. For example a 6 pole motor the encoder commutation tracks will output 3 pulses per channel per revolution and for an 8 pole motor the encoder commutation tracks will give 4 pulses per channel per revolution.

The commutation signals allow the drive to operate the motor at 'switch on' with only a small possible reduction in efficiency and torque in the motor. The best way to explain this is to use an example where an encoder is connected to a motor with 6 poles.

On power up the drive would look at the S1, S2 and S3 signals to determine where the stator is relative to the rotor or magnetic plate. This would give a known position that is within 60 ° electrical of an electrical cycle (20 ° mechanical). During this initial period, the drive assumes that it is in the middle of this 60 ° unknown region. So the worse case error of this is 30 ° electrical (10 ° mechanical), which equates to a drop of 13.4% in the rated torque when 100% current is delivered into the motor winding. When the drive is commanded to move the motor position, the stator is energized causing the plate or rotor to move. While the rotor or plate is moving, the drive detects that a signal switch (edge detection) has occurred on one of the commutation channels (S1, S2 or S3). At this point the drive knows exactly where it is in the electrical cycle and adjusts the field orientation to compensate for the error. At this point the drive switches over to using only the incremental signals for commutation and the commutation channels are no longer used.

6.12 ADDITIONAL MOTOR WEIGHTS

6.12.1 hd

Additional motor weight information (kg)																		
Motor frame size	055			067			089			115			142			190		
Frame length	A	B	C	A	B	C	A	B	C	A	B	C	A	B	C	A	B	C
Braked '5' brake		+0.4			+0.7			+1.0			+1.5			+2.8			+4.0	
Braked '6' brake					+0.68			+1.4			+2.09			+2.29				
Fan box											+1.65			+1.9			+2.6	
Hybrid box small											+0.5			+0.5				
Hybrid box medium														+0.5			+0.5	
Hybrid box large																	+1.5	

6.12.2 fm

Additional motor weight information (kg)																												
Motor Frame Size	075				095					115					142					190							250		
Frame Length	A	B	C	D	A	B	C	D	E	A	B	C	D	E	A	B	C	D	E	A	B	C	D	E	F	G	H	D	E	F
Braked '5' Brake		+0.5				+0.6					+1.2					+1.7					+3.5							+11.0		
Braked '6' Brake		+0.7				+1.40					+1.78					+2.28														
High Inertia		+0.17				+0.51					+0.94					+1.68					+2.25							+4.88	+5.7	+6.91
Fan Box		+1.2				+1.35					+1.65					+1.9					+2.6							+4.2		
Hybrid Box Small		+0.5				+0.5					+0.5					+0.5														
Hybrid Box Medium																+0.5					+0.5									
Hybrid Box Large																					+1.5							+1.5		

Note: All motor weights approximate to ± 10%. Can differ depending on winding, connector and feedback type, PCD and output shaft size.

6.13 BRAKE SPECIFICATION

Unimotors may be ordered with an internal rear mounted spring applied parking brake. The brake works on a failsafe principle. The brake is active when the supply voltage is switched off, and the brake is released when the supply voltage is switched on.

If a motor is fitted with a failsafe brake, take care not to subject the motor shaft to excessive torsional shocks or resonance when the brake is engaged or disengaged. Doing so can damage the brake.

SAFETY NOTE

The failsafe brake is for use as a holding brake with the motor shaft stationary.

Do NOT use it as a dynamic brake. Using it in this manner will cause brake wear and eventual failure. Emergency Stop situations can contribute to brake wear and failure.

Note: Shunting the brake primary coil with an external diode to avoid switching peaks increases the release time considerably. This is usually required to protect solid state switches, or to reduce arcing at the brake relay contacts (Diode 1N4001 recommended)

"Resin" Friction Material Application & Benefits:

- The main feature change to the type 6 brake is the use of an improved Resin friction material compared to its predecessors.
- The type 6 brake has improved overall performance in operation compared to the aluminium cored friction materials containing natural rubber.
- Type 6 brakes can endure higher interface temperatures and pressures.
- Type 6 brake disk are moulded as a one-piece part providing better tensile, compressive & impact qualities compared to other friction materials.

6.13.1 Unimotor fm

Motor frame	Supply volts	Input power	Static torque	Release time	Moment of inertia	Backlash **
			Parking Brake (5)			
Size	Vdc	W	Nm	ms nom	kg.cm²*	Degrees **
075	24	6.3	2.2	22	0.07	1.03
095	24	16	12.2	60	0.39	0.75
115	24	23	20	126	0.21	0.75
142	24	23	20	126	0.21	0.75
190 (A-D)	24	25	42	95	1.85	0.77
190 (E-H)	24	25	67	120	4.95	0.77
250	24	62	135	252	14.3	0.5

Motor frame	Supply volts	Input power @ 20 °C	Static torque	Release time	Moment of inertia	Backlash **
			Parking Brake (6)			
Size	Vdc	W	Nm	ms nom	kg.cm²*	Degrees **
075	24	tba	2	64	consult factory	tba
095	24	18	10	64	0.153	1.25°
115	24	23	16	tba	0.413	0.38°
142 (A-C)	24	17.5	16	tba	consult factory	0.38°

*Note 1 kg.cm^2 = 1 x 10 – 4 kg.m^2 ** Backlash figure will increase with time

6.13.2 Unimotor hd

Motor frame	Supply volts	Input power	Static torque	Release time	Moment of inertia	Backlash **
			Parking Brake (5)			
Size	Vdc	Watts	Nm	ms nom	kg.cm²*	Degrees **
055	24	6.3	1.8	22	0.03	0.73
067	24	10.2	4	<50	0.073	0.75
089	24	23	10	<50	0.115	0.75
115	24	23	20	120	0.21	0.75
142	24	25	42	95	1.85	0.77
190 (C-D)	24	25	67	120	4.95	0.77
190 F	24	54.5	100	TBA	7.72	0.75

Motor frame	Supply volts	Input power @ 20 °C	Static torque	Release time	Moment of inertia	Backlash **
			Parking Brake (6)			
Size	Vdc	Watts	Nm	ms nom	kg.cm²*	Degrees **
067	24	15	2	35.2	0.063	0.62°
089	24	18.5	10	72.8	0.259	0.45°
115	24	17.5	16	64	0.506	0.38°
142	24	17.5	16	64	0.506	0.38°

*Note 1 kg.cm^2 = 1 x 10 – 4 kg.m^2 ** Backlash figure will increase with time

- The brake is intended for parking duty and is not for dynamic or safety use.
- Refer to your Automation Center or Distributor if your application requires dynamic braking in emergency conditions.
- To provide protection to the brake control circuit it is recommended that a diode is connected across the output terminals of the solid state or relay contacts devices.
- Larger torque brakes are available as on option. Contact your Automation Center or Distributor for details.
- Figures are shown at 20 °C brake temperature. Apply the derate factor of 0.9 to the high energy brake if motor temperature is above 100 °C.
- The brake will engage when power is removed.

It is recommended to run extensive application validation testing and confirm the motor brake life span when the motor is mounted vertically and the motor runs through high acceleration and deceleration.

6.14 RADIAL LOAD

When selecting a motor some consideration must be made to the loading that the required application will put on the motor shaft. All shaft loads are transferred to the motor's bearing system, so a poorly selected motor could result in premature bearing failure.

Maximum axial and radial load

The following graphs show the Unimotor in terms of bearing strength. It has to be noted that the graphs are based on theoretical calculations, and that the bearing life of the motor is affected by the following:

- Speed
- Radial load applied to the bearings
- Axial load applied to the bearings
- Shock and vibration (external shock/vibration applied to the motor)
- Bearing temperature
- Bearing cleanliness
- Motor mounting to the application

The loads in the following graphs have been calculated using ISO 281 calculation L10(h). The loads and speeds used are considered to be constant throughout the life of the bearing.

The following factors have been taken into consideration when calculating the loads:

- 90% reliability
- Radial load applied on the output shaft away from the shoulder and constant. The distance can be read on the different graphs
- Axial load going toward the motor and constant
- Load factor of 1: no vibration applied to the motor
- Temperature of the bearing: 100 °C max
- Grease clean

6.14.1 Radial load Unimotor fm

Radial load vs. Axial load on 075U3/E3

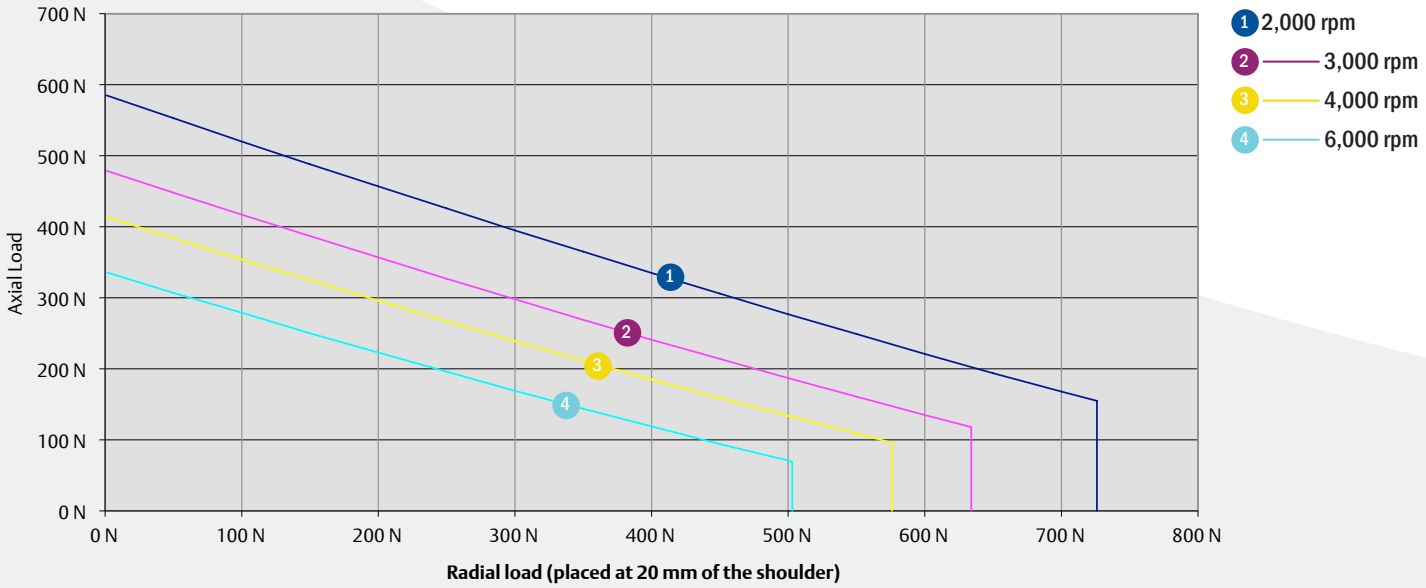

075U3/E3 $L_{10(h)}$ Bearing life for 20,000 hours (reliability 90 %, load factor of 1). Do not exceed a maximum axial load of 900 N

Axial loads exceeding that shown on the graph are permissible but the bearing life will be reduced below 20,000 hrs if applied

Radial load vs. Axial load on 095U3/E3

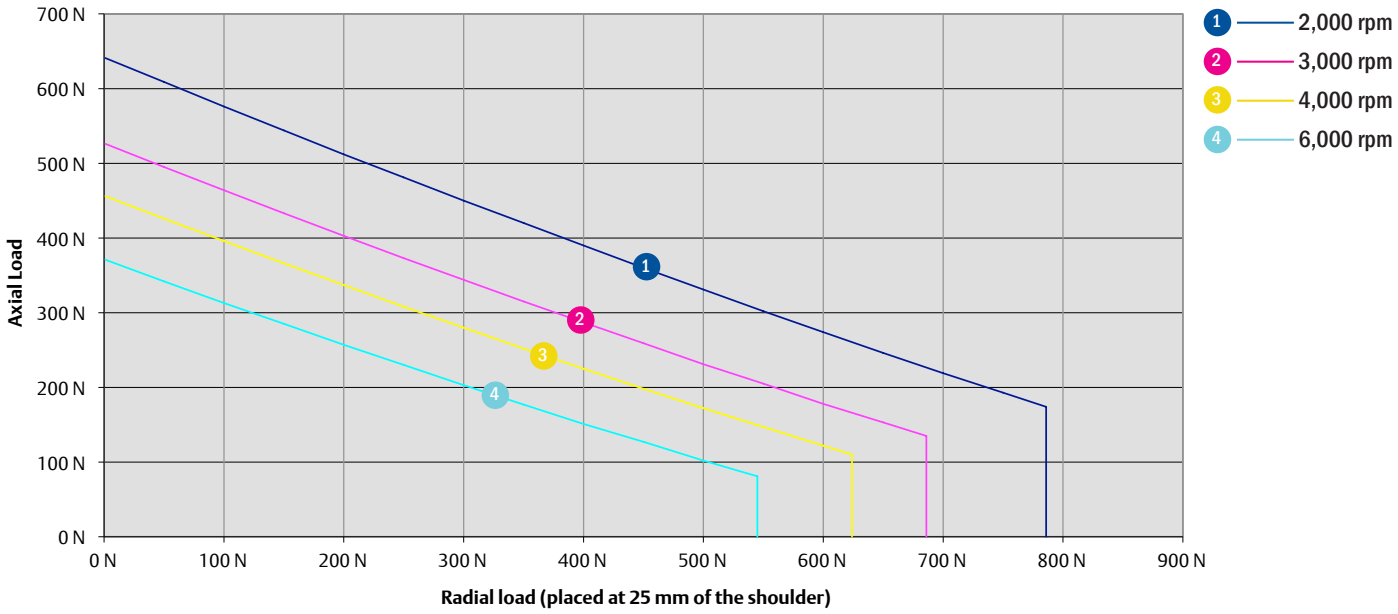

095U3/E3 $L_{10(h)}$ Bearing life for 20,000 hours (reliability 90 %, load factor of 1). Do not exceed a maximum axial load of 850 N

Axial loads exceeding that shown on the graph are permissible but the bearing life will be reduce below 20,000 hrs if applied

Radial load vs. Axial load on 115U3/E3

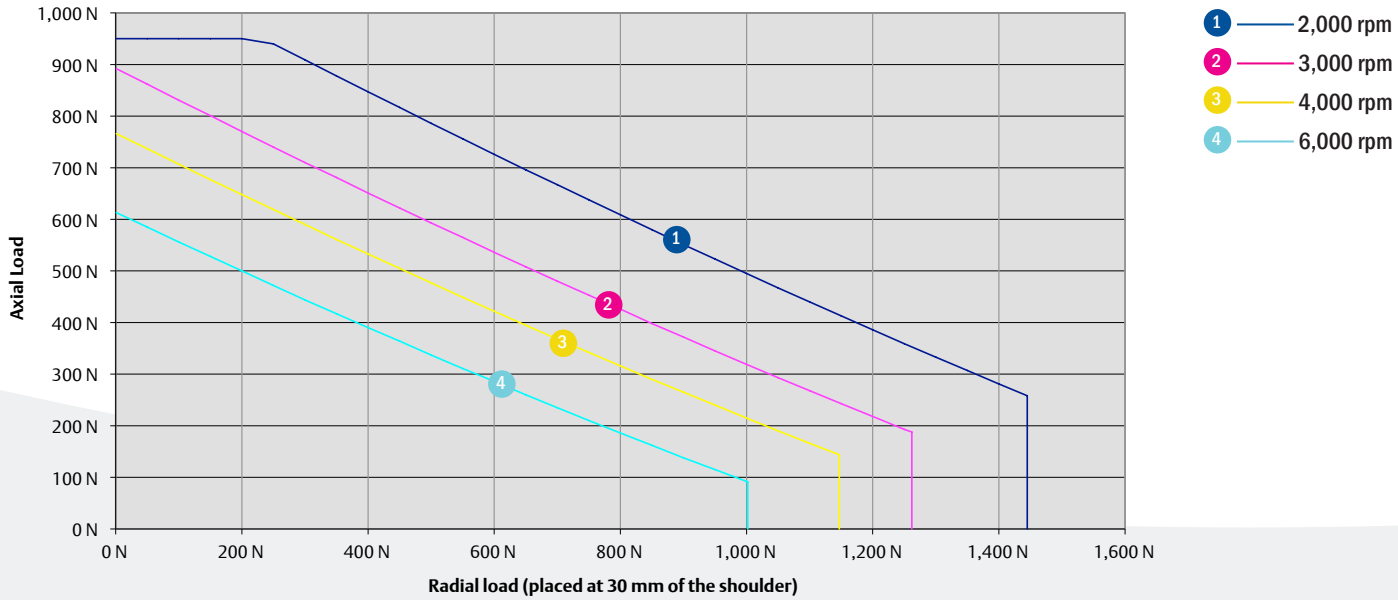

115U3/E3 $L_{10(h)}$ Bearing life for 20,000 hours (reliability 90 %, load factor of 1). Do not exceed a maximum axial load of 950 N

Axial loads exceeding that shown on the graph are permissible but the bearing life will be reduced below 20,000 hrs if applied

Radial load vs. Axial load on 142U3/E3

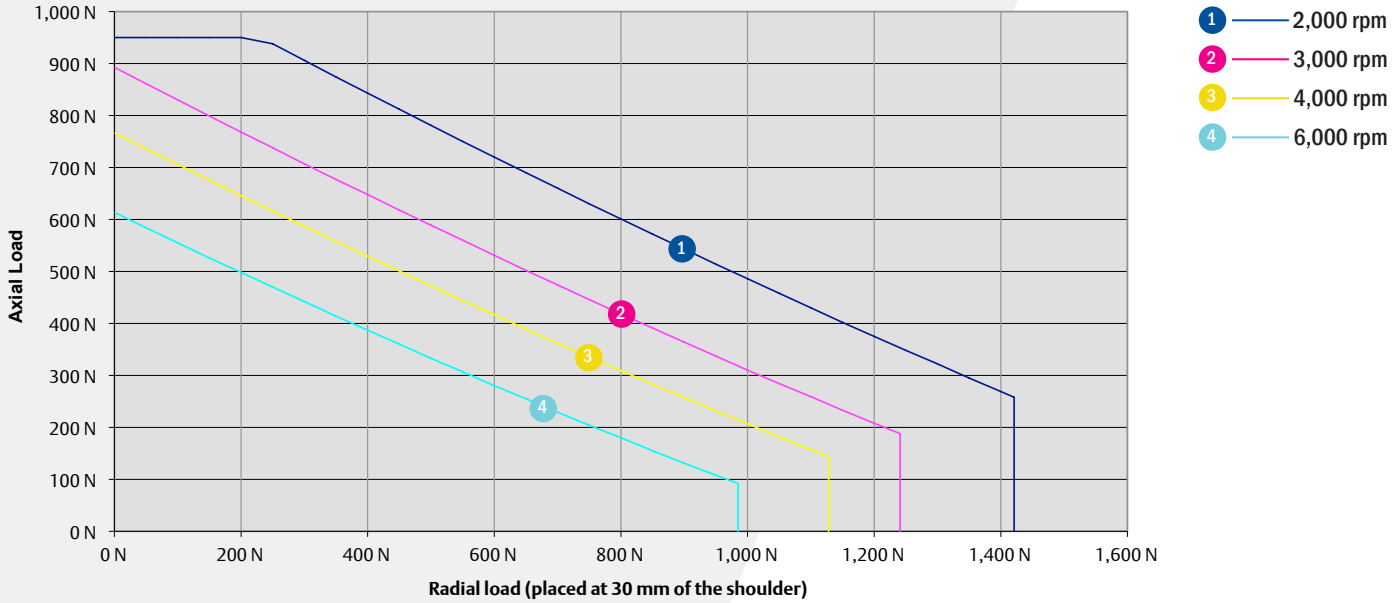

142U3/E3 $L_{10(h)}$ Bearing life for 20,000 hours (reliability 90 %, load factor of 1). Do not exceed a maximum axial load of 950 N

Axial loads exceeding that shown on the graph are permissible but the bearing life will be reduced below 20,000 hrs if applied

Radial load vs. Axial load on 190U3/E3

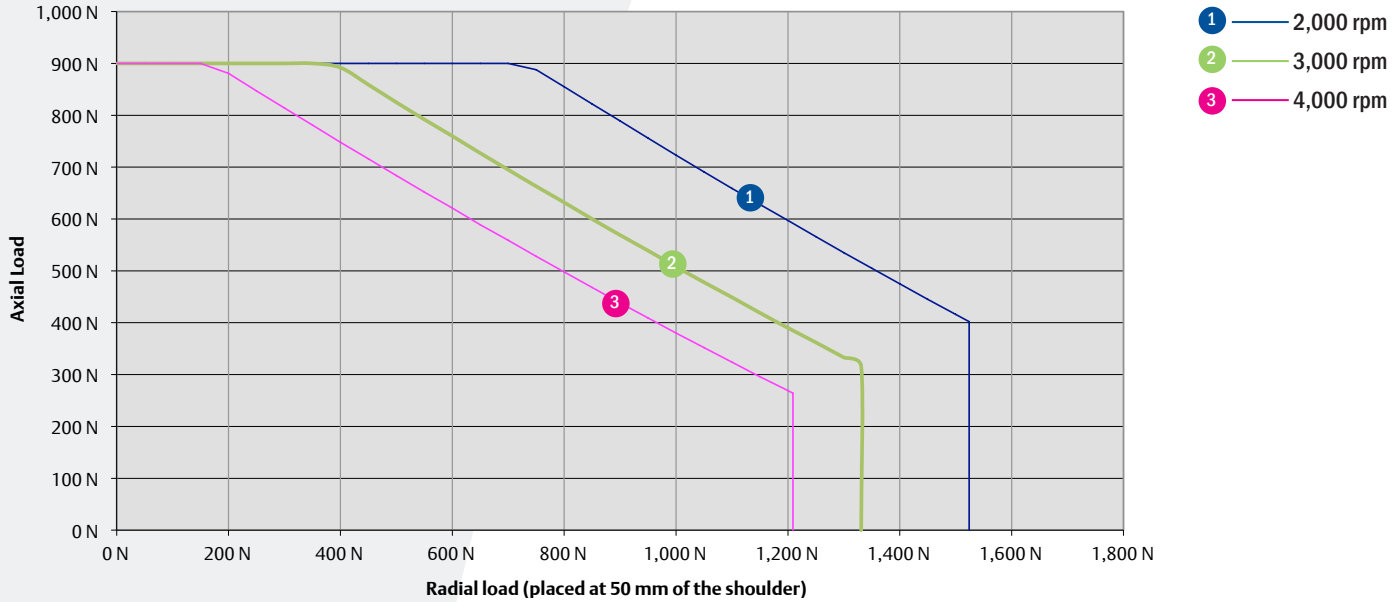

190U3/E3 $L_{10(h)}$ Bearing life for 20,000 hours (reliability 90 %, load factor of 1). Do not exceed a maximum axial load of 900 N

Axial loads exceeding that shown on the graph are permissible but the bearing life will be reduced below 20,000 hrs if applied

Radial load vs. Axial load on 250U3/E3

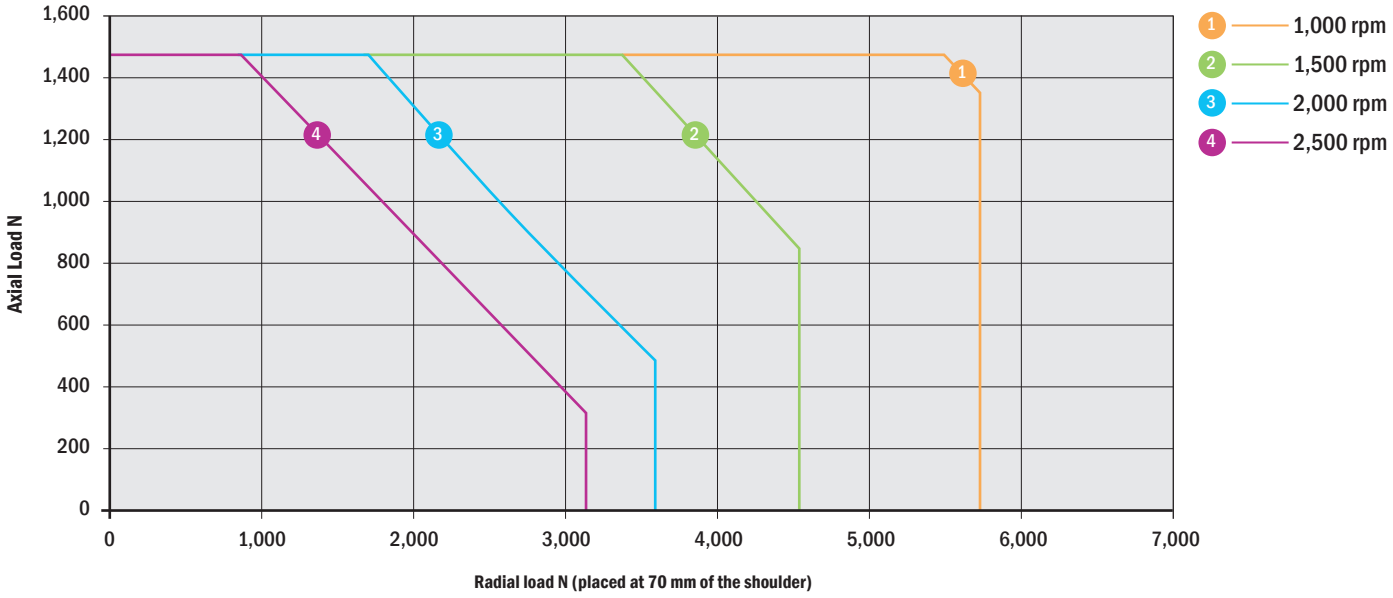

250U3 $L_{10(h)}$ Bearing life for 20,000 hours (reliability 90 %, load factor of 1). Do not exceed a maximum axial load of 1,450 N

Axial loads exceeding that shown on the graph are permissible but the bearing life will be reduced below 20,000 hrs if applied

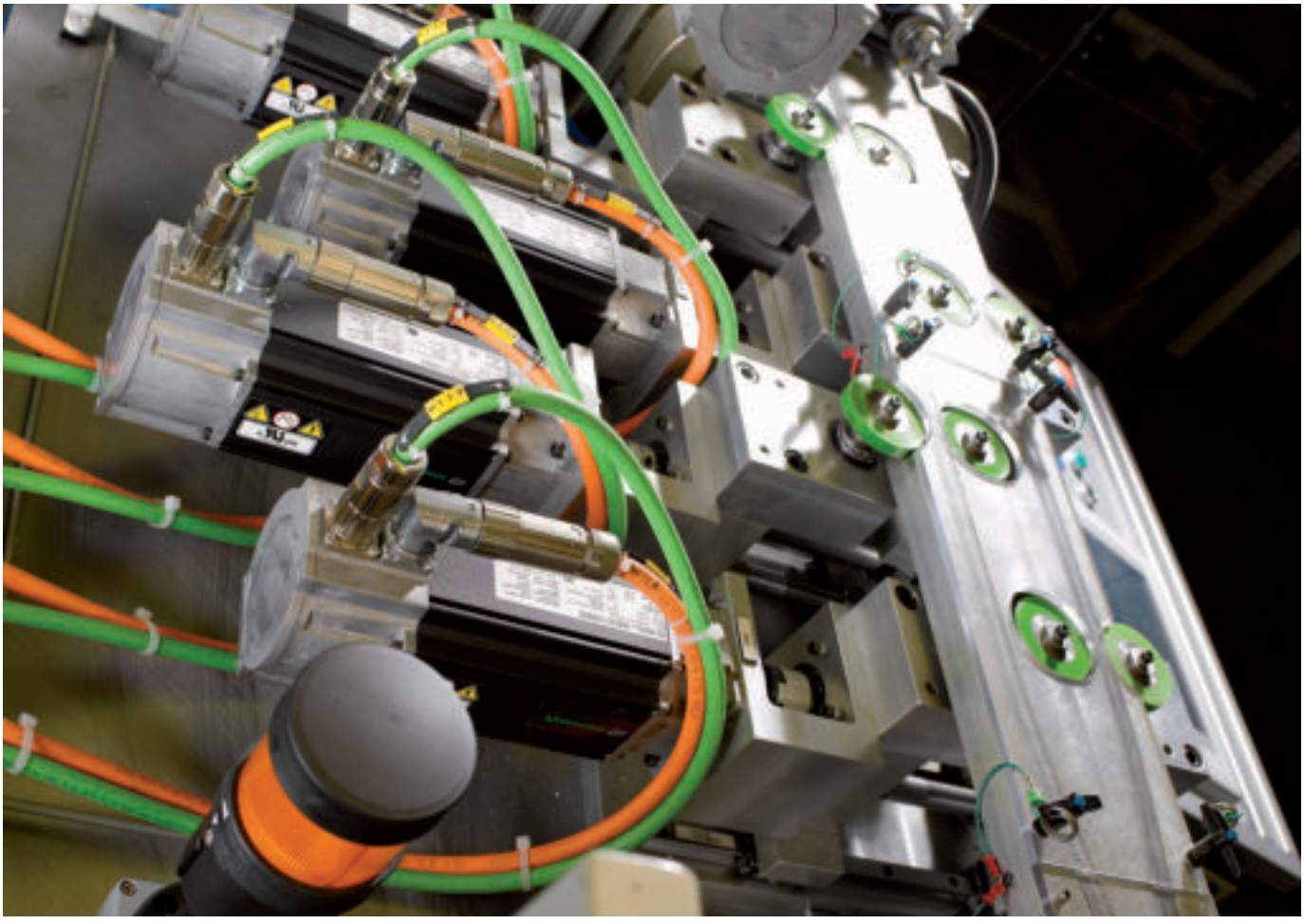

6.14.2 Radial load Unimotor hd

Radial load vs. Axial load on 055UD/ED

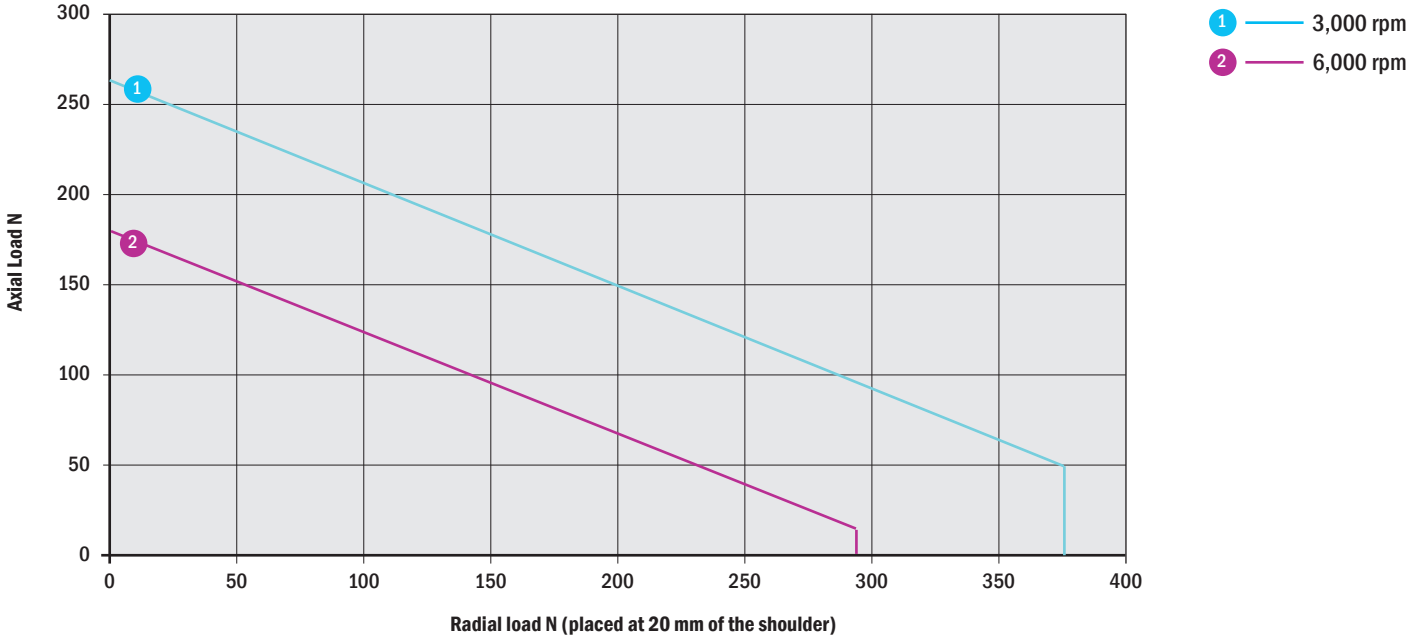

055UD/ED $L_{10(h)}$ Bearing life for 20,000 hours (reliability 90 %, load factor of 1). Do not exceed a maximum axial load of 650 N

Axial loads exceeding that shown on the graph are permissible but the bearing life will be reduced below 20,000 hrs if applied

Radial load vs. Axial load on 067UD/ED

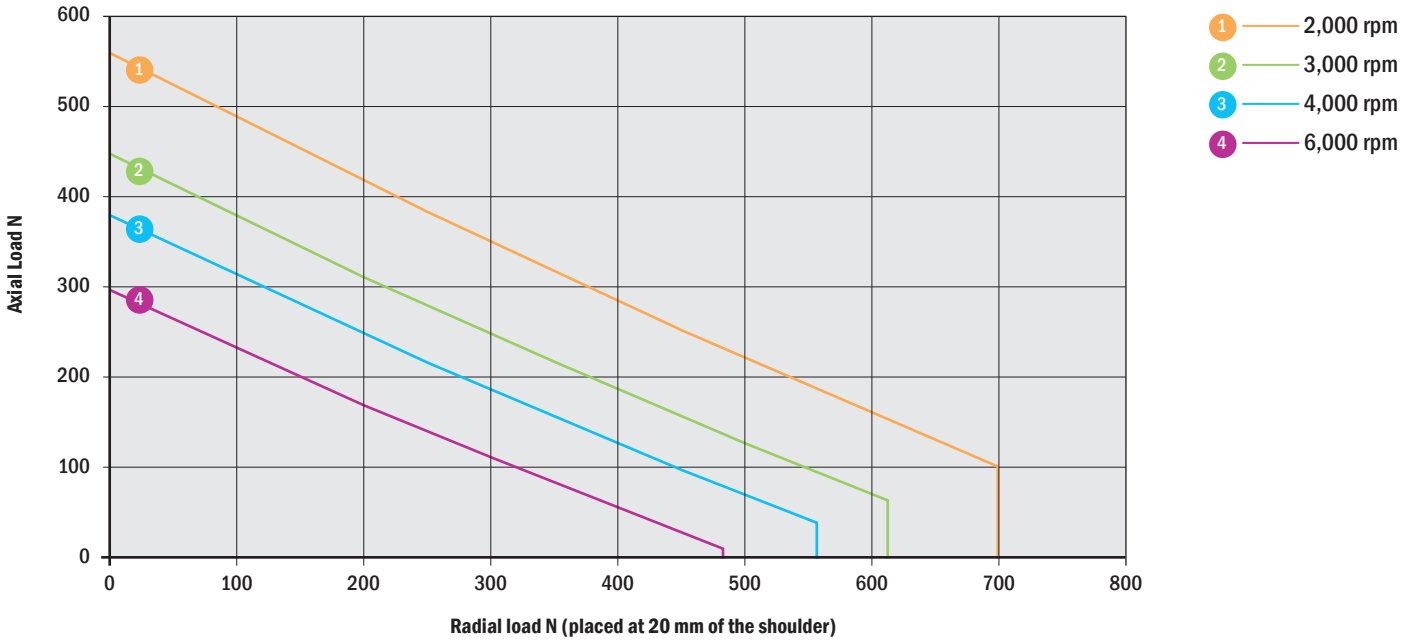

067UD/ED $L_{10(h)}$ Bearing life for 20,000 hours (reliability 90 %, load factor of 1). Do not exceed a maximum axial load of 650 N

Axial loads exceeding that shown on the graph are permissible but the bearing life will be reduced below 20,000 hrs if applied

Radial load vs. Axial load on 089UD/ED

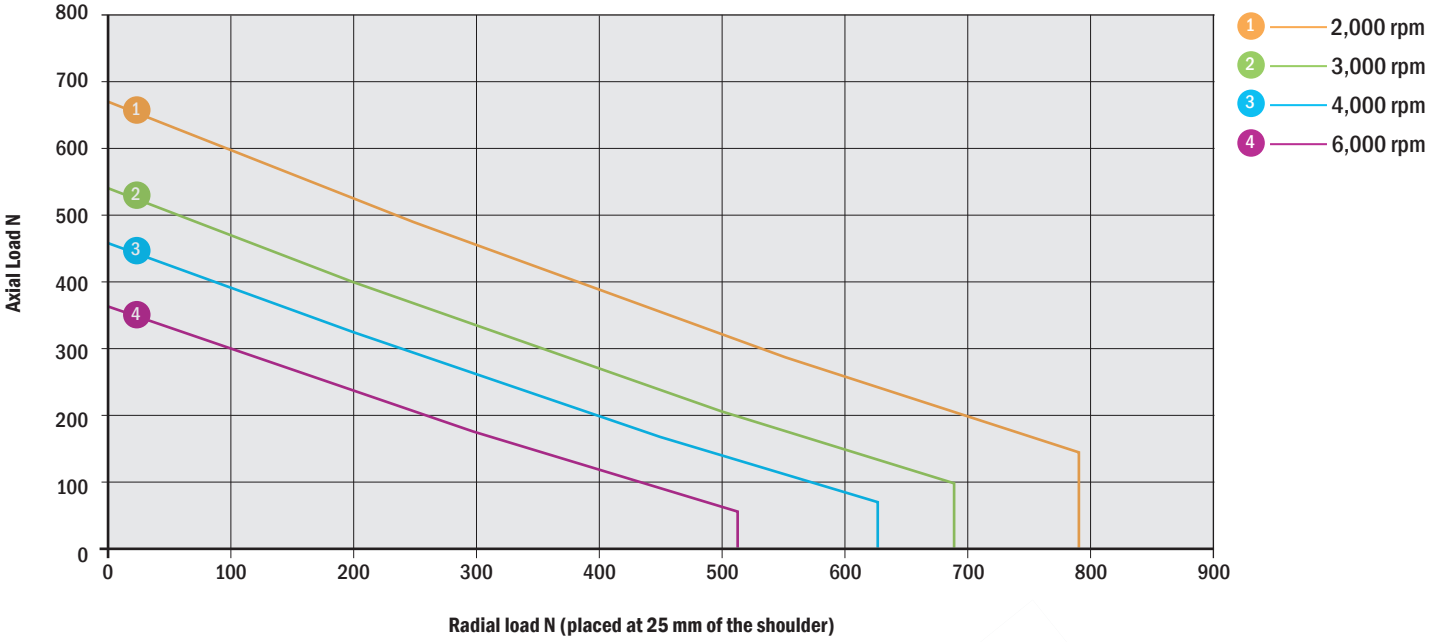

089UD/ED $L_{10(h)}$ Bearing life for 20,000 hours (reliability 90 %, load factor of 1). Do not exceed a maximum axial load of 1,000 N

Axial loads exceeding that shown on the graph are permissible but the bearing life will be reduced below 20,000 hrs if applied

Radial load vs. Axial load on 115UD/ED

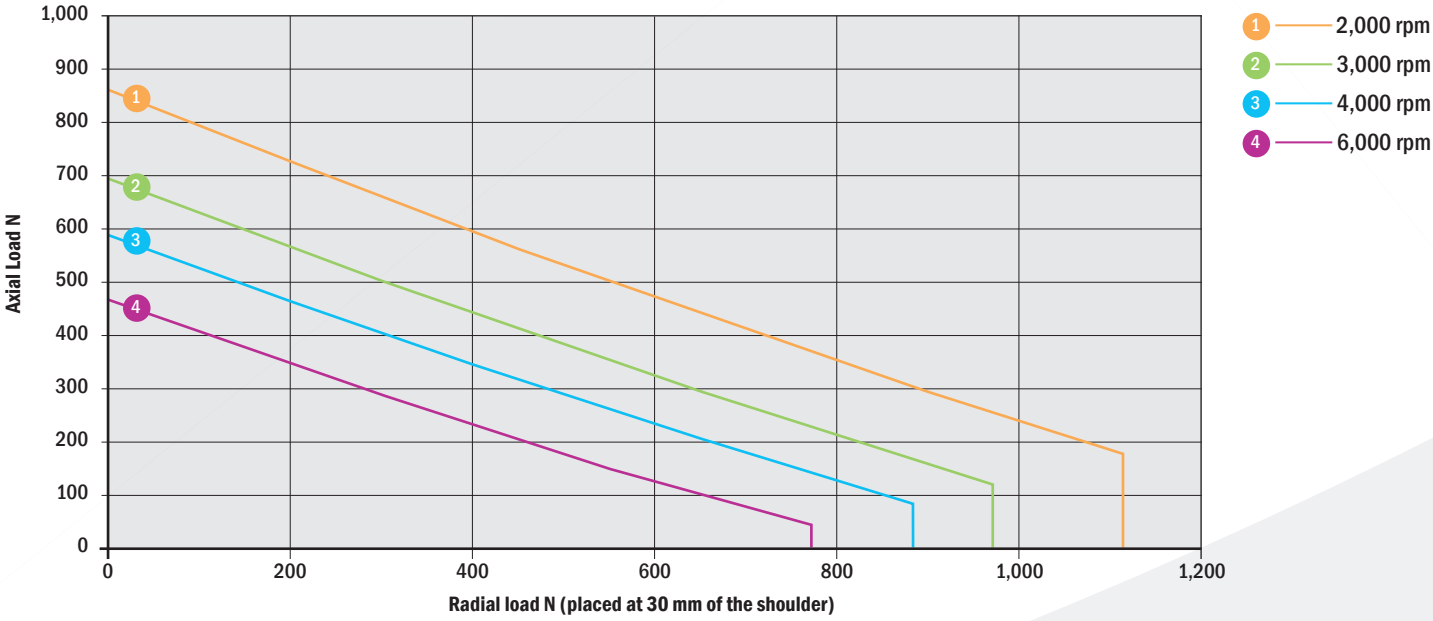

115UD/ED $L_{10(h)}$ Bearing life for 20,000 hours (reliability 90 %, load factor of 1). Do not exceed a maximum axial load of 1,000 N

Axial loads exceeding that shown on the graph are permissible but the bearing life will be reduced below 20,000 hrs if applied

It can be seen on some graphs that the curve line becomes horizontal. This is due to the axial pushing load on the shaft (see Shaft push back load). This limit should not be exceeded in case the shaft moves.

Radial load vs. Axial load on 142UD/ED

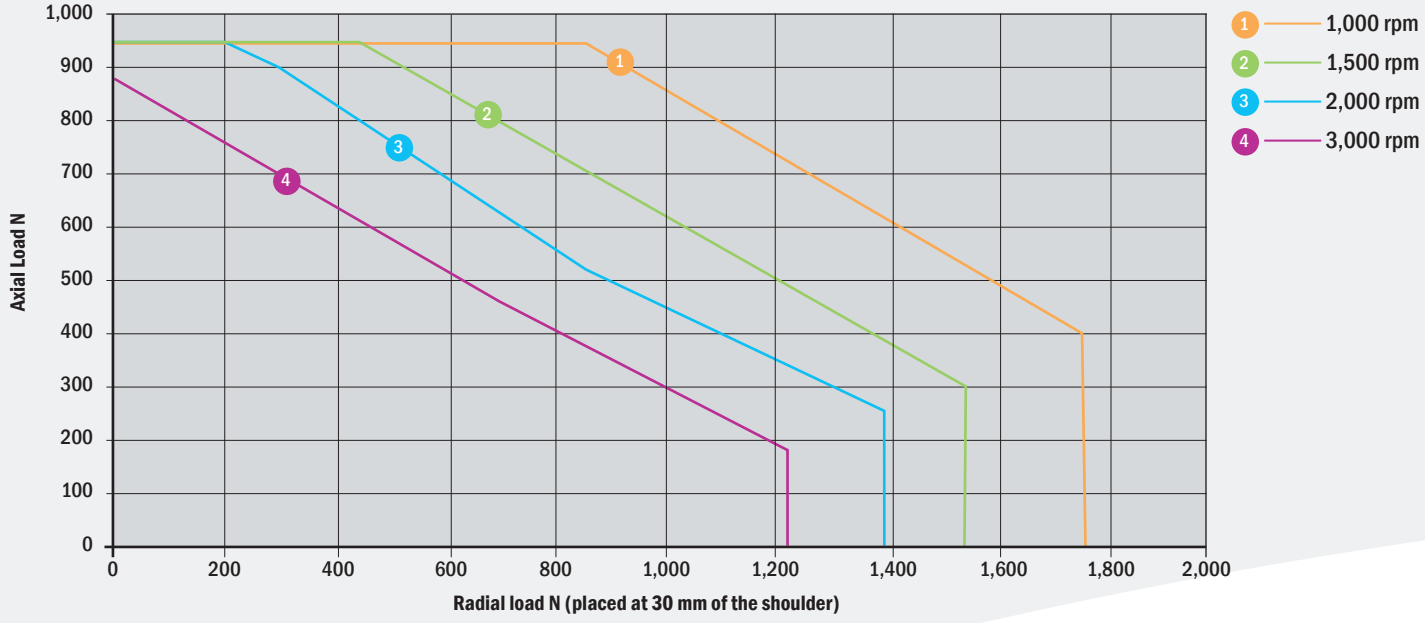

142UD/ED $L_{10(h)}$ Bearing life for 20,000 hours (reliability 90 %, load factor of 1). Do not exceed a maximum axial load of 950 N

Radial load vs. Axial load on 190UD/ED

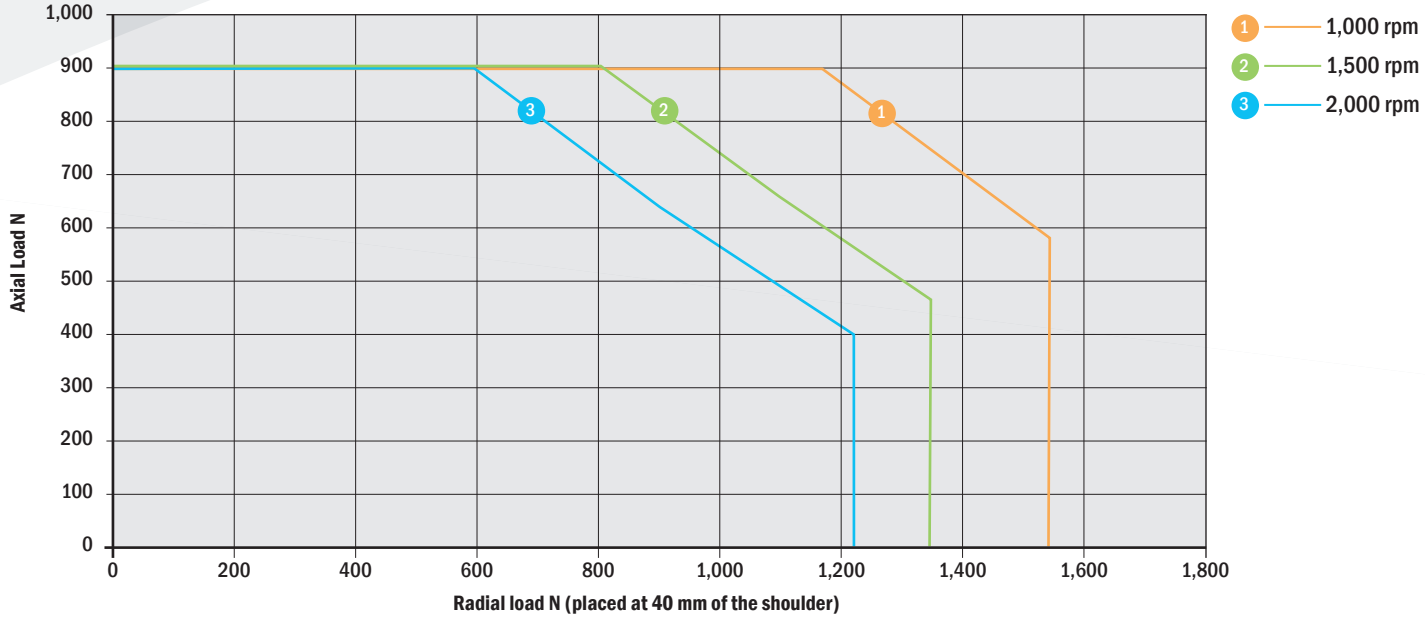

190UD/ED $L_{10(h)}$ Bearing life for 20,000 hours (reliability 90 %, load factor of 1). Do not exceed a maximum axial load of 900 N

6.15 BEARING LIFE AND OUTPUT SHAFT STRENGTH

The maximum output shaft that can be machined on the motor is determined by the inner diameter of the bearings. The bearing sizes on Unimotor fm motors have increased in comparison with the Unimotor UM and this allows a larger output shaft to be machined. Larger output shafts mean stronger output shafts.

The following graphs show this improvement.

Maximum Bearing life

It has to be noted that the graphs are based on theoretical calculations and the motor is affected by the following.

- Speed
- Radial load applied to the bearings
- Axial load applied to the bearings
- Shock and vibration
  (external shock/vibration applied to the motor)
- Bearing temperature
- Bearing cleanliness
- Motor mounting to the application

The loads in the following graphs have been theoretically calculated. The following factors were taken into consideration:

- 90% reliability (for bearing life only)
- Radial load applied on the output shaft away from the shoulder and constant. The distance can be read on the different graphs.
- Axial loads going towards the motor and constant (Axial load = 0 Nm)
- Load factor of 1 - no vibration applied to the motor (for bearing life only).
- Temperature of the bearing: 100 °C max.
- Grease clean (for bearing life only).
- Torque alternating (for shaft strength only).

6.15.1 Shaft push back load

The minimum pushing load needed to move the rotor relative to the bearings.

The table (below) shows the minimum push back force on Unimotor.

Motor	Push back force (N)	Motor	Push back force (N)
Unimotor fm		Unimotor hd	
075	900	**055**	190
095	850	**067**	650
115	950	**089**	1,000
142	950	**115**	1,200
190	900	**142**	1,350
250	1,450	**190**	1,600

6.15.2 Unimotor fm

Bearing life and output shaft strength on 075U3/E3

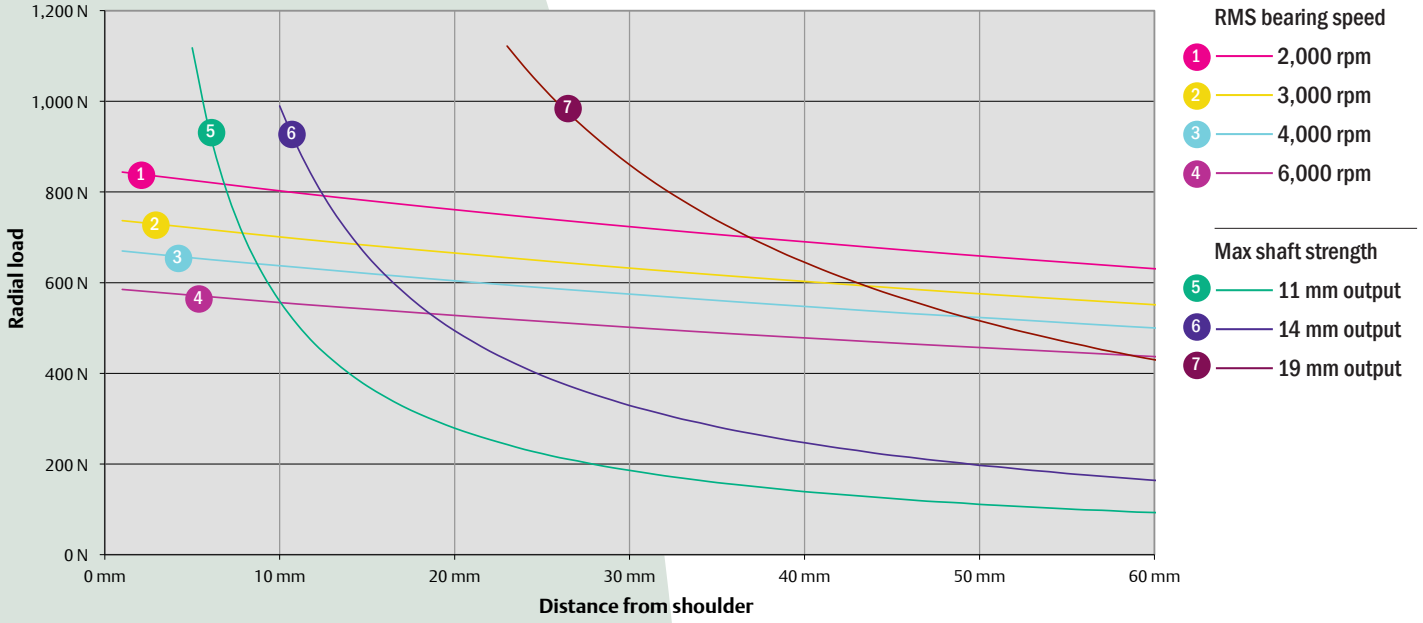

075U3/E3 $L_{10(h)}$ Bearing life and output shaft strength (20,000 hours, 90% reliability, load factor of 1)

Bearing life and output shaft strength on 095U3/E3

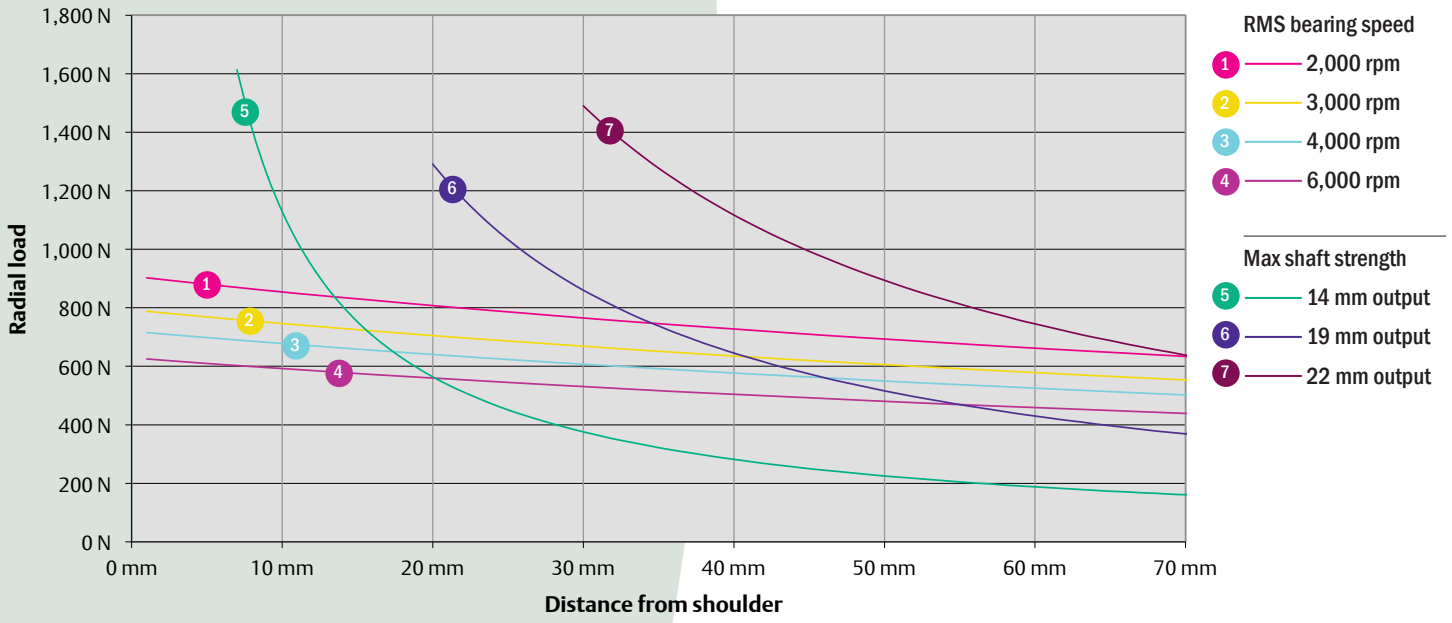

095U3/E3 $L_{10(h)}$ Bearing life and output shaft strength (20,000 hours, 90% reliability, load factor of 1)

Bearing life and output shaft strength on 115U3/E3

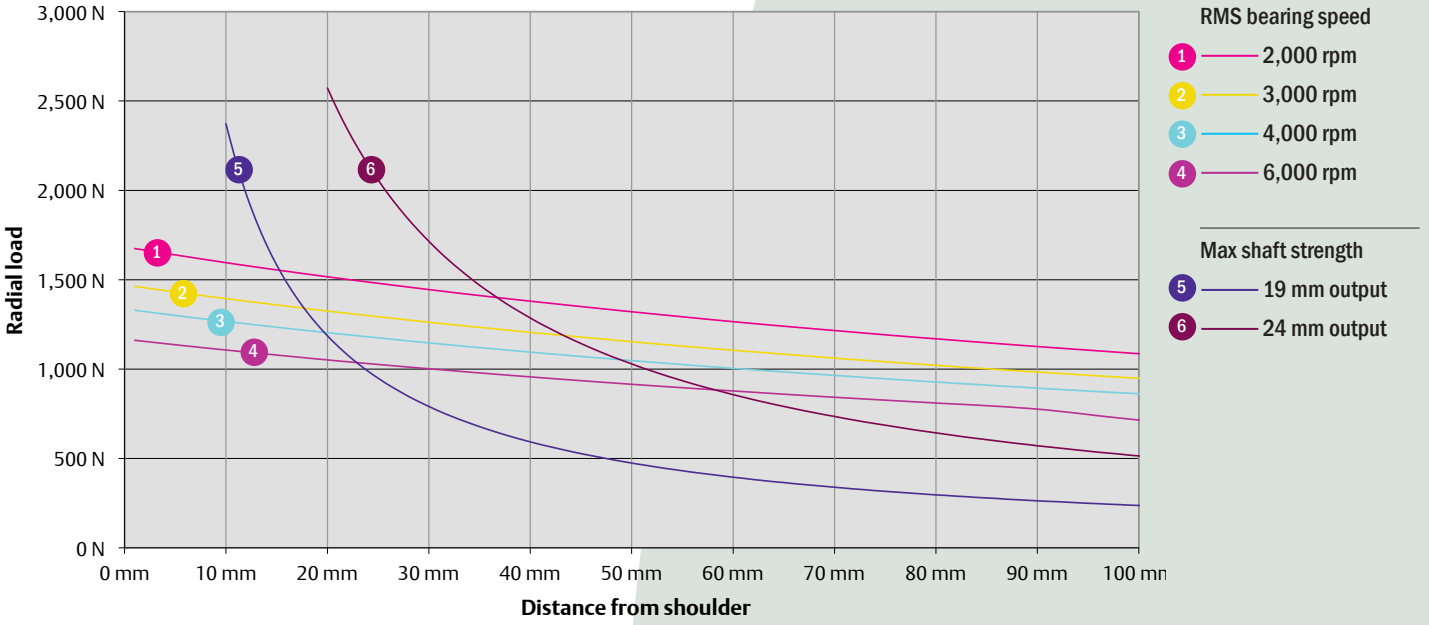

115U3/E3 $L_{10(h)}$ Bearing life and output shaft strength (20,000 hours, 90% reliability, load factor of 1)

Bearing life and output shaft strength on 142U3/E3

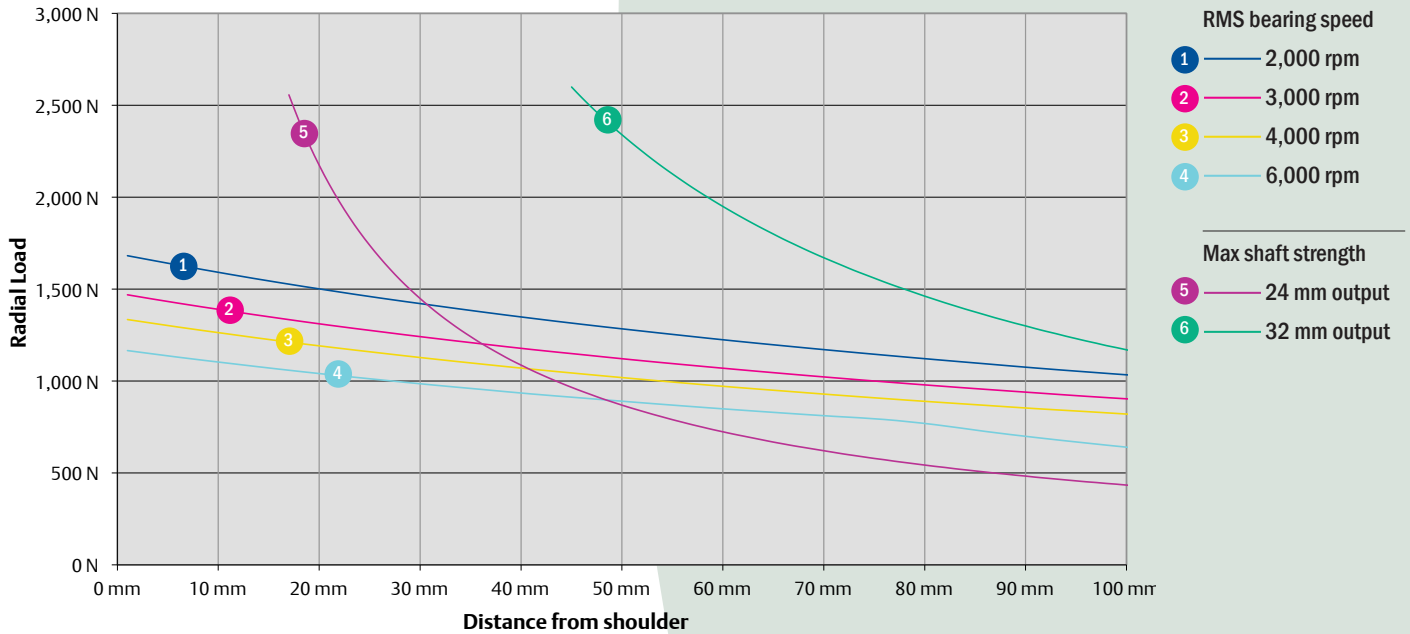

142U3/E3 $L_{10(h)}$ Bearing life for 20,000 hours (reliability 90 %, load factor of 1)

Bearing life and output shaft strength on 190U3/E3

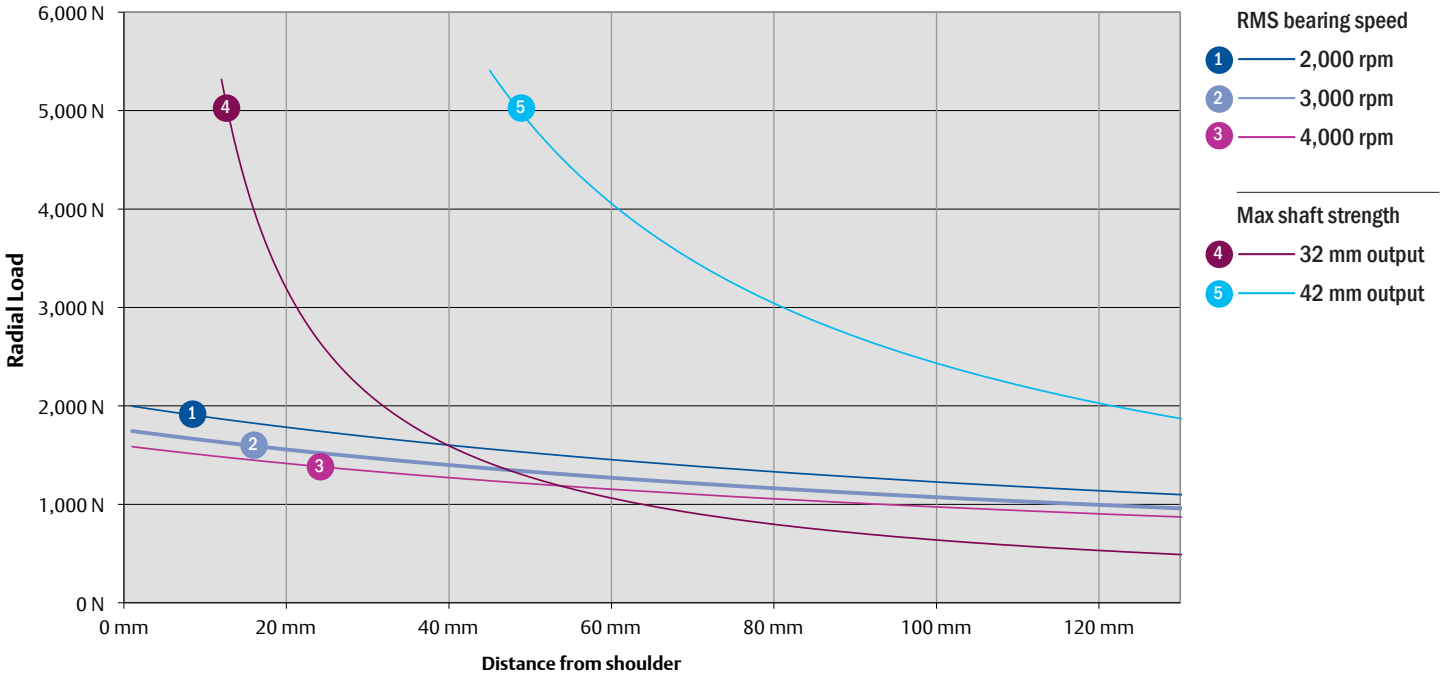

190U3/E3 $L_{10(h)}$ Bearing life for 20,000 hours (reliability 90 %, load factor of 1)

Bearing life and output shaft strength on 250U3/E3

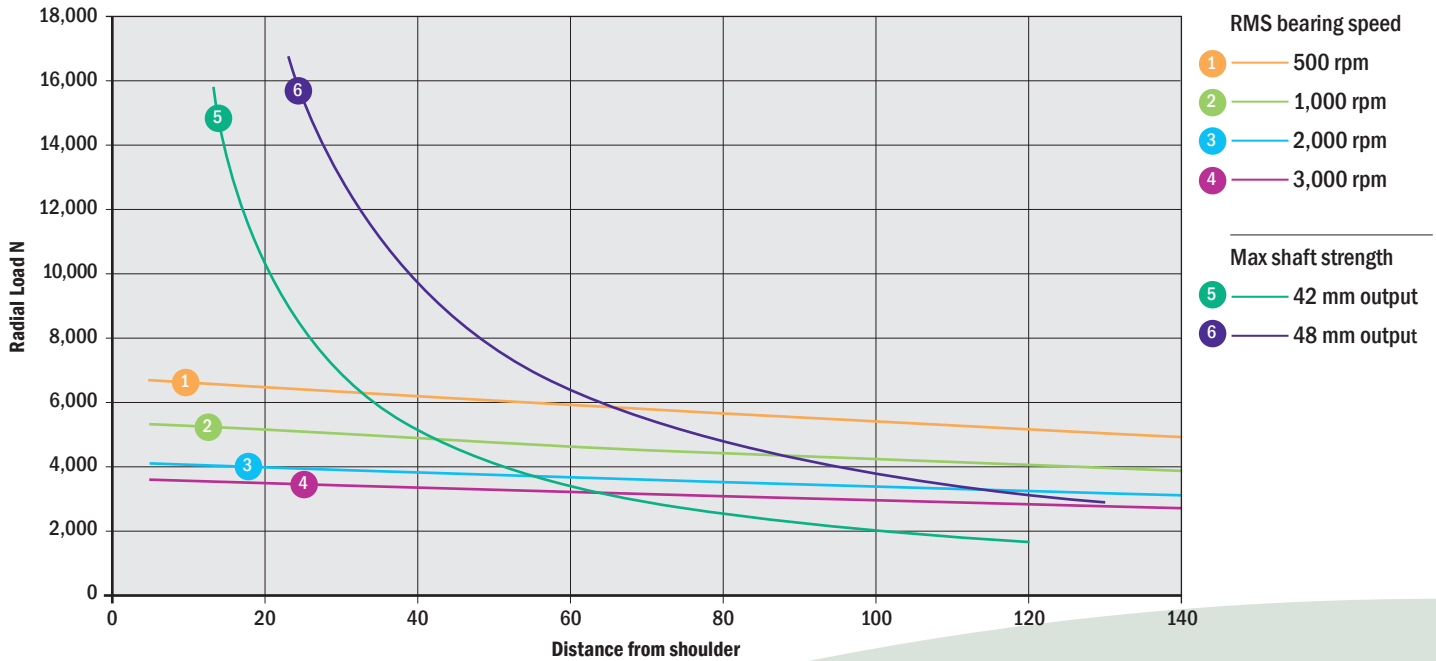

250U3/E3 $L_{10(h)}$ Bearing life for 20,000 hours (reliability 90 %, load factor of 1)

6.15.3 Unimotor hd

Bearing life and output shaft strength on 055UD/ED

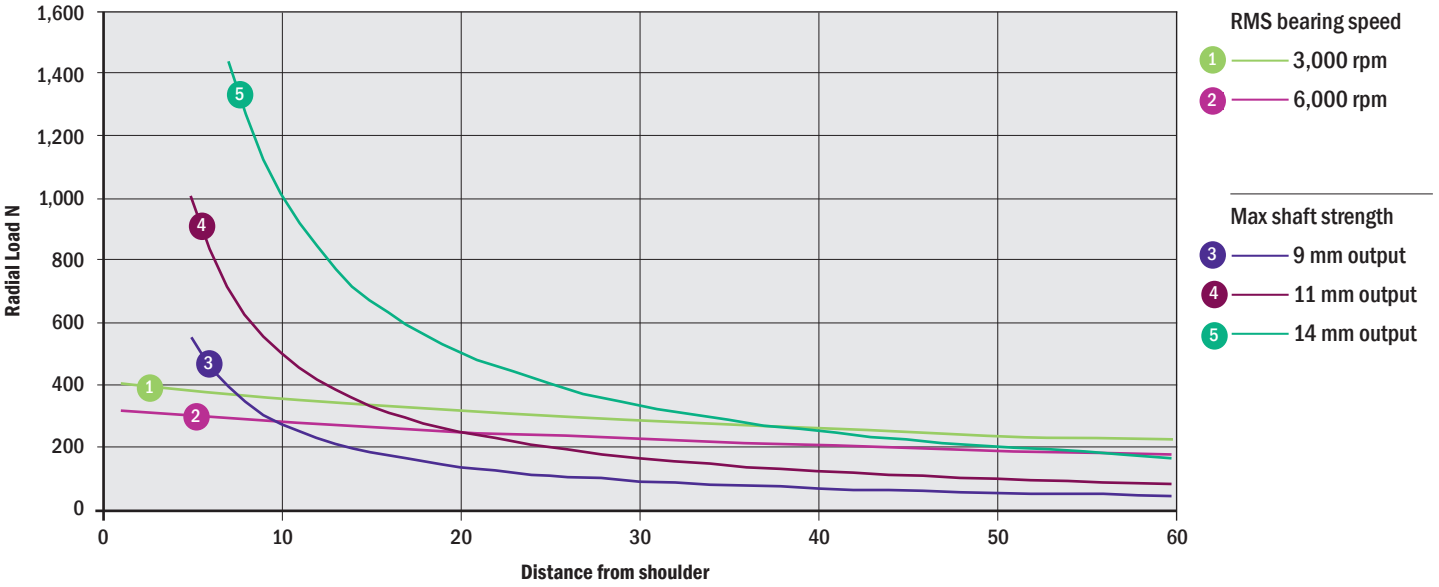

055UD/ED $L_{10(h)}$ Bearing life for 20,000 hours (reliability 90 %, load factor of 1). Do not exceed a maximum axial load of 450 N

Bearing life and output shaft strength on 067UD/ED

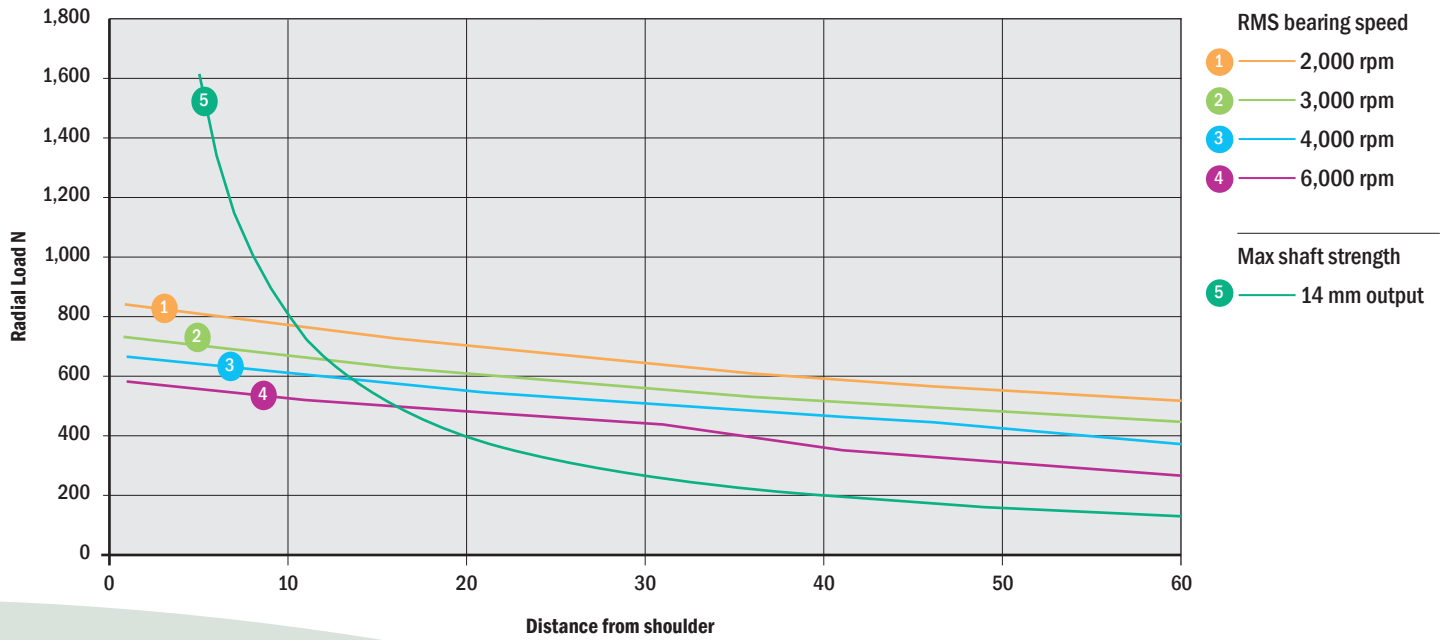

067UD/ED $L_{10(h)}$ Bearing life for 20,000 hours (reliability 90 %, load factor of 1).

Bearing life and output shaft strength on 089UD/ED

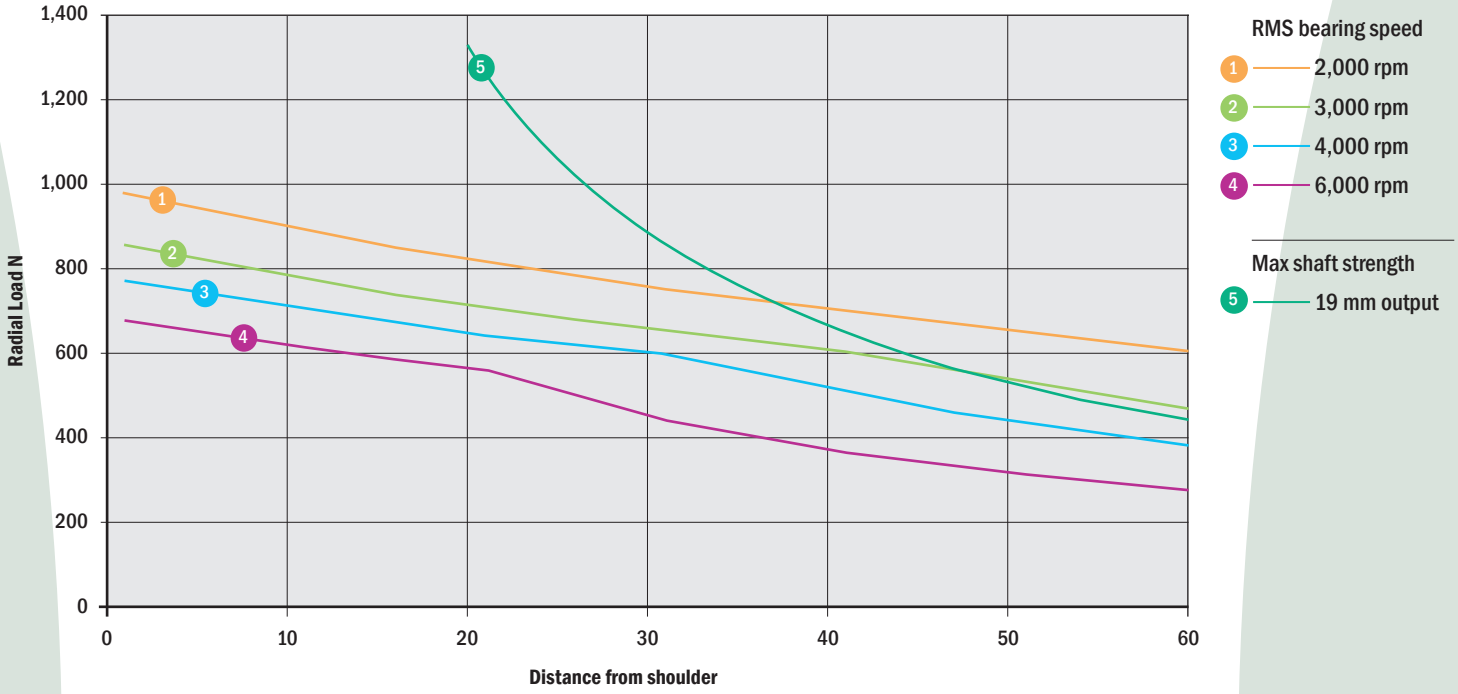

089UD/ED $L_{10(h)}$ Bearing life for 20,000 hours (reliability 90 %, load factor of 1).

Bearing life and output shaft strength on 115UD/ED

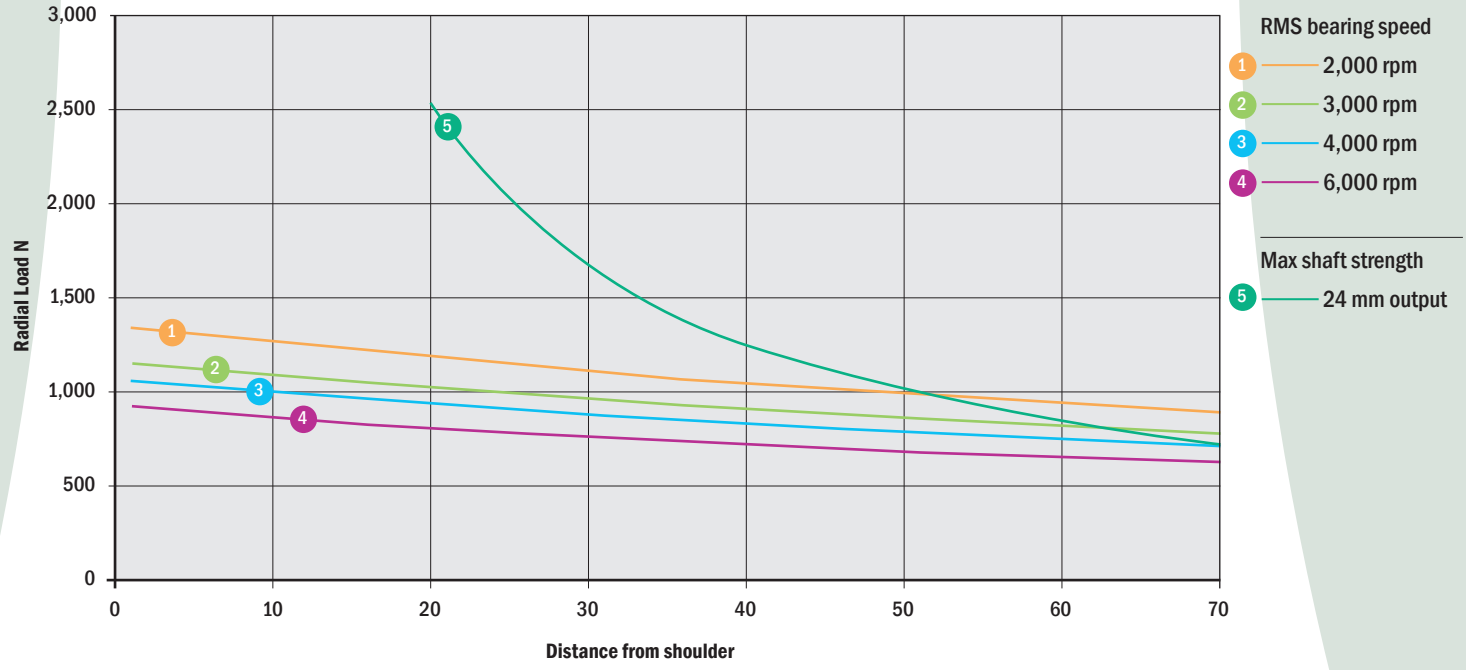

115UD/ED $L_{10(h)}$ bearing life for 20,000 hours (reliability 90 %, load factor of 1).

Bearing life and output shaft strength on 142UD/ED

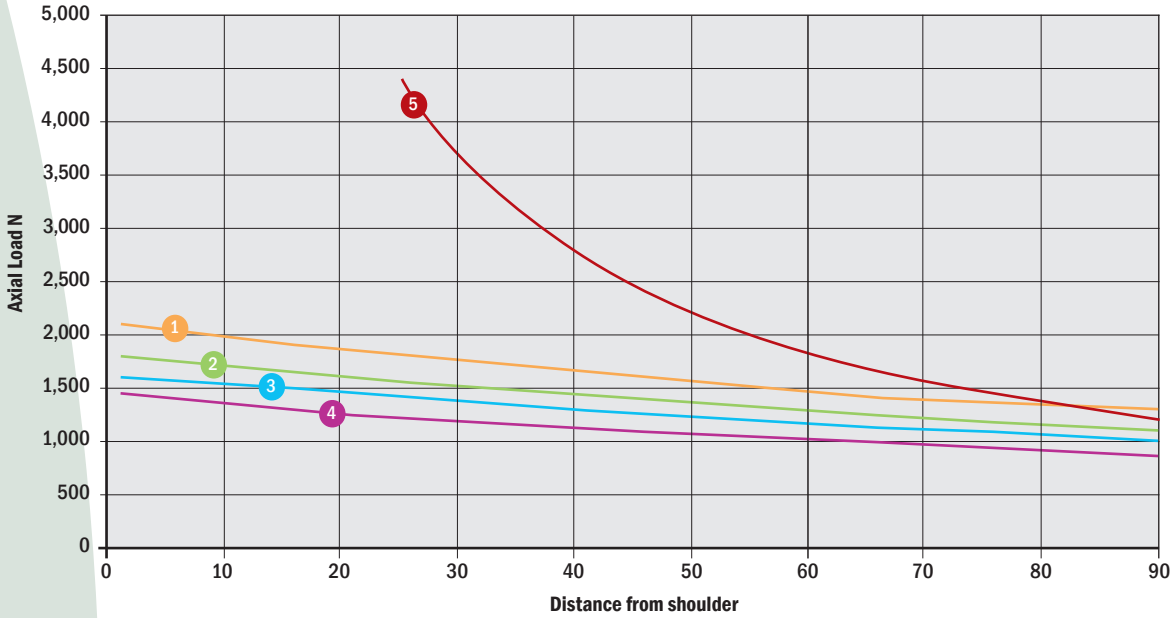

142UD/ED $L_{10(h)}$ Bearing life for 20,000 hours (reliability 90 %, load factor of 1).

Bearing life and output shaft strength on 190UD/ED

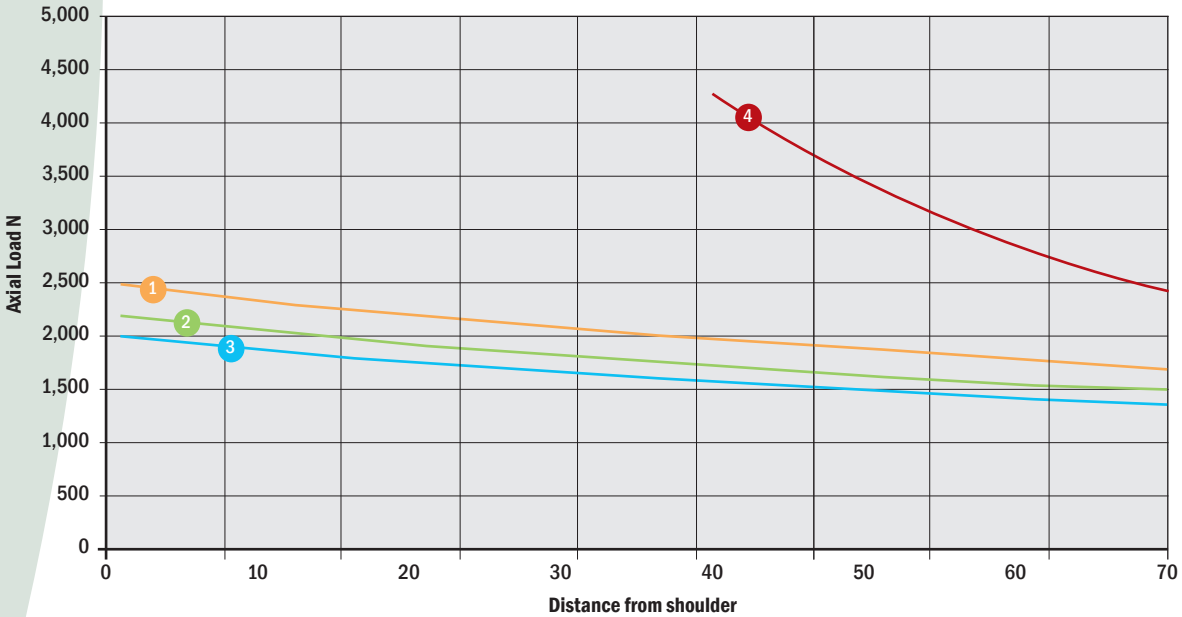

190UD/ED $L_{10(h)}$ Bearing life for 20,000 hours (reliability 90 %, load factor of 1).

7 Performance graphs

The torque speed graph depicts the limits of operation for a given motor. The limits of operation are shown for three categories.

Torque/speed graph

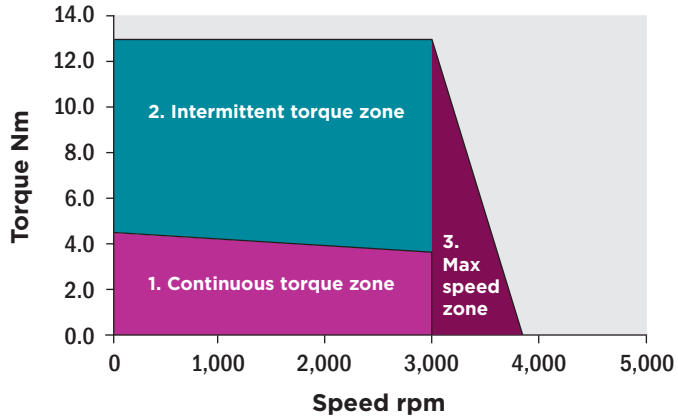

1. Continuous or rms torque zone

This area gives the effective continuous or rms torque available for repetitive torque sequences. Continuous or rms torque must be within this area otherwise the motor may overheat and cause the system to trip out.

2. Intermittent or peak torque zone

Above the continuous zone is the intermittent zone where the motor may be safely operated for short periods of time. Operation within the intermittent zone is permissible provided that the defined peak torque limit is not exceeded. On some frame sizes the peak torque factor of 3 x stall current only applies up to a certain percentage level of rms current before it starts to reduce. Please refer to the Standard (2) peak torque section for details.

Maximum peak torque is the upper limit of the intermittent zone and must never be exceeded, to do so will damage the motor.

3. Maximum speed zone

To the right of the graph is a sloping line depicting the maximum motor speed when using a 200 V/400 V drive supply. The speed limit line is dependent upon the motor windings, and the voltage supplied to the drive. Operation within the maximum speed zone is permissible as long as the maximum speed limit is not exceeded. If the speed is increased beyond the limit shown, the motors sinusoidal waveform would have insufficient voltage and will clip and distort, causing inefficiency and higher temperature. If the distortion increases further, the drive may loose control of the motor and trip.

Plotting an operating point

To estimate whether a motor is the correct choice for a given system, it is necessary to calculate or measure the rms torque and the rms speed for a given system in its normal continual stop/start sequenced mode. These operating points may be plotted on the torque speed graph. As shown in the first graph below, if the rms speed and torque point lies well within the continuous zone, then the motor is suitable for the application. The second graph below shows the max speed has increased to 3,900 rpm and this is now outside the safe area and another speed motor must be selected.

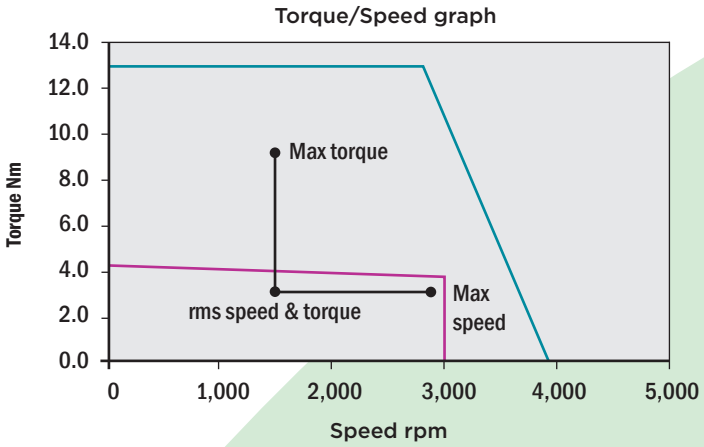

Max torque =10 Nm: Max speed = 2,900 rms torque =3 Nm: rms speed = 1,500

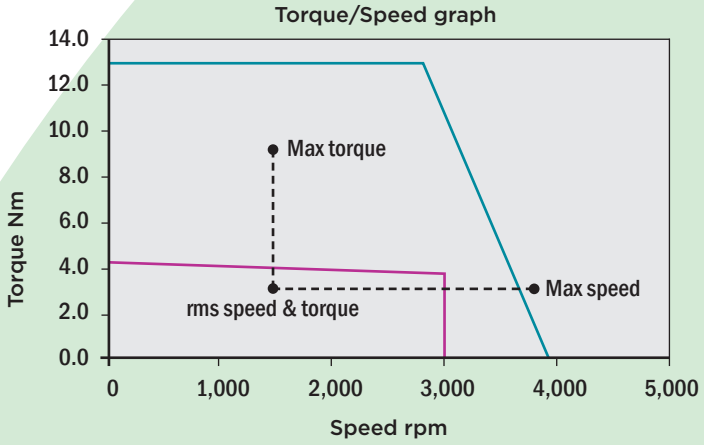

Max torque =10 Nm: Max speed = 3,900 rms torque =3 Nm: rms speed = 1,500

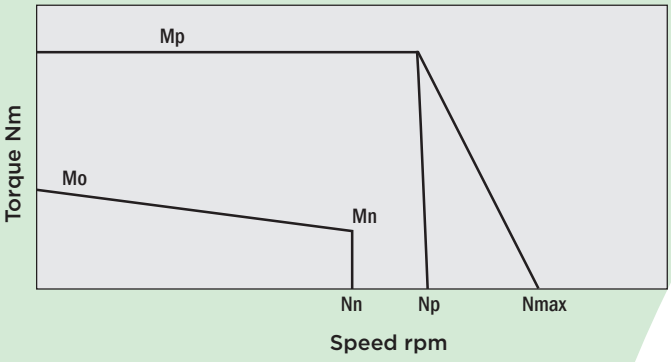

Mn = continuous torque at the rated speed: Nn = rated speed:
Np = maximum speed at the peak torque: Mo = stall torque:
Mp = peak torque: Nmax = maximum speed with no torque

Performance graph data

hd 400 V	Nn [rpm]	Mo [Nm]	Mn [Nm]	Mp [Nm]	Np [rpm]	Nmax [rpm]
HD055UDA30	3000	0.72	0.7	2.88	4569	8444
HD055UDA60	6000	0.72	0.68	2.88	4569	8444
HD055UDB30	3000	1.18	1.05	4.72	2306	4222
HD055UDB60	6000	1.18	0.9	4.72	5607	8000
HD055UDC30	3000	1.65	1.48	6.6	2327	3800
HD055UDC60	6000	1.65	1.2	6.6	5321	7600
HD067UDA30	3000	1.45	1.4	4.35	3569	7755
HD067UDA60	6000	1.45	1.3	4.35	3569	7755
HD067UDB30	3000	2.55	2.45	7.65	2176	3877
HD067UDB60	6000	2.55	2.2	7.65	4797	7755
HD067UDC30	3000	3.7	3.5	11.1	2083	3877
HD067UDC60	6000	3.7	3.1	11.1	4590	7755
HD089UDA30	3000	3.2	3	9.6	1760	3877
HD089UDA40	4000	3.2	2.9	9.6	2244	5170
HD089UDA60	6000	3.2	2.65	9.6	3750	7755
HD089UDB30	3000	5.5	4.85	16.5	1795	3877
HD089UDB40	4000	5.5	4.55	16.5	2704	5170
HD089UDB60	6000	5.5	3.8	16.5	3743	7755
HD089UDC30	3000	8	6.9	24	2082	3877
HD089UDC40	4000	8	6.35	24	2546	5170
HD089UDC60	6000	8	5	24	3726	7755
HD115UDB20	2000	10.2	8.6	30.6	1277	2585
HD115UDB30	3000	10.2	7.7	30.6	2109	3877
HD115UDC20	2000	14.6	11.9	43.8	1445	2585
HD115UDC30	3000	14.6	10.5	43.8	2027	3877
HD115UDD20	2000	18.8	15.6	56.4	1445	2585
HD115UDD30	3000	18.8	13.6	56.4	2232	3877
HD142UDC15	1500	25	22.3	74.9	1242	1938
HD142UDC20	2000	25	21.4	74.9	1674	2585
HD142UDC30	3000	25	18.4	74.9	2581	3877
HD142UDD15	1500	31.5	27	94.5	1329	1938
HD142UDD20	2000	31.5	25.7	94.5	1674	2585
HD142UDD30	3000	31.5	20.9	94.5	2743	3877
HD142UDE15	1500	38	31.7	114	1346	1938
HD142UDE20	2000	38	29.6	114	1641	2585
HD142UDE30	3000	38	23	114	2781	3877
HD190UDC15	1500	52	46.2	156	1028	1938
HD190UDC20	2000	52	42.5	156	1361	2585
HD190UDD15	1500	62	52.2	186	1135	1938
HD190UDF15	1500	85	68.5	255	1224	1938

fm 400 V	Nn [rpm]	Mo [Nm]	Mn [Nm]	Mp [Nm]	Np [rpm]	Nmax [rpm]
FM075U3A20	2000	1.44	1.3	4.32	371	2585
FM075U3A30	3000	1.44	1.3	4.32	1638	3877
FM075U3A40	4000	1.44	1.2	4.32	2539	5170
FM075U3A60	6000	1.44	1.1	4.32	4838	7755
FM075U3B20	2000	2.65	2.5	7.95	1102	2585
FM075U3B30	3000	2.65	2.3	7.95	2299	3877
FM075U3B40	4000	2.65	2.1	7.95	3367	5170
FM075U3B60	6000	2.65	1.9	7.95	5751	7755
FM075U3C20	2000	3.72	3.5	11.16	1413	2585
FM075U3C30	3000	3.72	3.3	11.16	2583	3877
FM075U3C40	4000	3.72	2.8	11.16	3827	5170
FM075U3C60	6000	3.72	2.8	11.16	6142	7755
FM075U3D20	2000	4.67	4.5	14.01	1561	2585
FM075U3D30	3000	4.67	4.2	14.01	2847	3877
FM075U3D40	4000	4.67	3.8	14.01	3897	5170
FM075U3D60	6000	4.67	3.4	14.01	6248	7755
FM095U3A20	2000	2.45	2.4	7.35	902	2585
FM095U3A30	3000	2.45	2.3	7.35	2021	3877
FM095U3A40	4000	2.45	2.3	7.35	2929	5170
FM095U3A60	6000	2.45	2	7.35	4996	7755
FM095U3B20	2000	4.5	4.3	13.5	1418	2585
FM095U3B30	3000	4.5	4.1	13.5	2589	3877
FM095U3B40	4000	4.5	3.8	13.5	3550	5170
FM095U3B60	6000	4.5	3.2	13.5	5868	7755
FM095U3C20	2000	6.3	5.9	18.9	1740	2585
FM095U3C30	3000	6.3	5.6	18.9	2864	3877
FM095U3C40	4000	6.3	5.3	18.9	3973	5170
FM095U3C60	6000	6.3	4.2	18.9	6128	7755

fm 400 V	Nn [rpm]	Mo [Nm]	Mn [Nm]	Mp [Nm]	Np [rpm]	Nmax [rpm]
FM095U3D20	2000	7.9	7.3	23.7	1810	2585
FM095U3D30	3000	7.9	6.9	23.7	2982	3877
FM095U3D40	4000	7.9	6.4	23.7	4115	5170
FM095U3E20	2000	9.25	8.5	27.75	1948	2585
FM095U3E30	3000	9.25	8.2	27.75	3133	3877
FM095U3E40	4000	9.25	7.4	27.75	4211	5170
FM115U3A20	2000	3.9	3.7	11.7	1027	2585
FM115U3A30	3000	3.9	3.5	11.7	1994	3877
FM115U3A40	4000	3.9	3	11.7	2764	5170
FM115U3A60	6000	3.9	2.7	11.7	4701	7755
FM115U3B20	2000	7.4	7.3	22.2	1428	2585
FM115U3B30	3000	7.4	6.7	22.2	2502	3877
FM115U3B40	4000	7.4	5.8	22.2	3365	5170
FM115U3B60	6000	7.4	5	22.2	5421	7755
FM115U3C20	2000	10.8	10.1	32.4	1659	2585
FM115U3C30	3000	10.8	9.5	32.4	2701	3877
FM115U3C40	4000	10.8	7.5	32.4	3696	5170
FM115U3D20	2000	13.65	11.9	40.95	1717	2585
FM115U3D30	3000	13.65	11.2	40.95	2839	3877
FM115U3D40	4000	13.65	8.3	40.95	3948	5170
FM115U3E20	2000	16	14.1	48	1807	2585
FM115U3E30	3000	16	12.7	48	2854	3877
FM115U3E40	4000	16	8.8	48	3981	5170
FM142U3A20	2000	6.2	5.9	18.6	1162	2585
FM142U3A30	3000	6.2	5.5	18.6	2012	3877
FM142U3A40	4000	6.2	4.1	18.6	2780	5170
FM142U3A60	6000	6.2	3.2	18.6	4308	7755
FM142U3B20	2000	11	10.4	33	1567	2585
FM142U3B30	3000	11	9.5	33	2473	3877
FM142U3B40	4000	11	8.1	33	3429	5170
FM142U3B60	6000	11	5.2	33	5227	7755
FM142U3C20	2000	15.7	14.7	47.1	1749	2585
FM142U3C30	3000	15.7	12.8	47.1	2690	3877
FM142U3C40	4000	15.7	10.2	47.1	3657	5170
FM142U3D20	2000	20.5	18.5	61.5	1803	2585
FM142U3D30	3000	20.5	16	61.5	2769	3877
FM142U3D40	4000	20.5	12.2	61.5	3729	5170
FM142U3E20	2000	25	21.5	75	1874	2585
FM142U3E30	3000	25	18.2	75	2900	3877
FM142U3E40	4000	25	14	75	3836	5170
FM190U3A20	2000	11.25	10.8	33.75	1087	2585
FM190U3A30	3000	11.25	10.3	33.75	1761	3877
FM190U3A40	4000	11.25	8.2	33.75	2387	5170
FM190U3B20	2000	22.5	20.6	67.5	1304	2585
FM190U3B30	3000	22.5	19.4	67.5	2013	3877
FM190U3B40	4000	22.5	18.2	67.5	2675	5170
FM190U3C20	2000	33.5	29.4	100.5	1376	2585
FM190U3C30	3000	33.5	26.5	100.5	1972	3877
FM190U3C40	4000	33.5	23	100.5	2801	5170
FM190U3D20	2000	44.5	37.9	133.5	1633	2585
FM190U3D30	3000	44.5	33.2	133.5	2178	3877
FM190U3D40	4000	44.5	29	133.5	3146	5170
FM190U3E20	2000	54	44.3	162	1474	2585
FM190U3E30	3000	54	34.2	162	2243	3877
FM190U3F20	2000	63	50.5	189	1491	2585
FM190U3F30	3000	63	35.2	189	2123	3877
FM190U3G20	2000	71	54	213	1438	2585
FM190U3G30	3000	71	36.2	213	1950	3877
FM190U3H20	2000	77	56	231	1449	2585
FM190U3H30	3000	77	37	231	2439	3877
FM250U3D10	1000	92	75	276	697	1176
FM250U3D15	1500	92	67	276	1081	1759
FM250U3D20	2000	92	65	276	1447	2345
FM250U3D25	2500	92	62	276	1873	2945
FM250U3E10	1000	116	92	348	676	1176
FM250U3E15	1500	116	76	348	1029	1759
FM250U3E20	2000	116	73	348	1519	2345
FM250U3E25	2500	116	70	348	1743	2945
FM250U3F10	1000	136	106	408	723	1176
FM250U3F15	1500	136	84	408	1107	1759
FM250U3F20	2000	136	81	408	1493	2345
FM250U3F25	2500	136	77	408	1767	2945

hd 220 V	Nn [rpm]	Mo [Nm]	Mn [Nm]	Mp [Nm]	Np [rpm]	Nmax [rpm]
HD055EDA30	3000	0.72	0.7	2.88	1913	4644
HD055EDA60	6000	0.72	0.68	2.88	4649	7740
HD055EDB30	3000	1.18	1.05	4.72	2207	3980
HD055EDB60	6000	1.18	0.9	4.72	5403	8038
HD055EDC30	3000	1.65	1.48	6.6	2320	3800
HD055EDC60	6000	1.65	1.2	6.6	5237	7206
HD067EDA30	3000	1.45	1.4	4.35	1395	3666
HD067EDA60	6000	1.45	1.3	4.35	3547	7333
HD067EDB30	3000	2.55	2.45	7.65	2138	3666
HD067EDB60	6000	2.55	2.2	7.65	4725	7333
HD067EDC30	3000	3.7	3.5	11.1	2052	3666
HD089EDA30	3000	3.2	3	9.6	1703	3666
HD089EDA40	4000	3.2	2.9	9.6	2161	4888
HD089EDA60	6000	3.2	2.65	9.6	3226	7333
HD089EDB30	3000	5.5	4.85	16.5	1800	3666
HD089EDB40	4000	5.5	4.55	16.5	2669	4888
HD089EDB60	6000	5.5	3.8	16.5	3789	7333
HD089EDC30	3000	8	6.9	24	2007	3666
HD089EDC40	4000	8	6.35	24	2592	4888
HD089EDC60	6000	8	5	24	3700	7333
HD115EDB20	2000	10.2	8.6	30.6	1274	2444
HD115EDB30	3000	10.2	7.7	30.6	2072	3666
HD115EDC20	2000	14.6	11.9	43.8	1423	2444
HD115EDC30	3000	14.6	10.5	43.8	2006	3666
HD115EDD20	2000	18.8	15.6	56.4	1354	2444
HD142EDC10	1000	25	23.3	74.9	616	1222
HD142EDC20	2000	25	21.4	74.9	1327	2444
HD142EDC30	3000	25	18.4	74.9	2357	3666
HD142EDD10	1000	31.5	29	94.5	668	1222
HD142EDD20	2000	31.5	25.7	94.5	1436	2444
HD142EDD30	3000	31.5	20.9	94.5	2297	3666
HD142EDE10	1000	38	34.5	114	686	1222
HD142EDE20	2000	38	29.6	114	1467	2444
HD190EDC10	1000	52	49	156	568	1222
HD190EDC20	2000	52	42.5	156	1193	2444
HD190EDD10	1000	62	56.5	186	565	1222
HD190EDF10	1000	85	77.5	255	622	1222

fm 220 V	Nn [rpm]	Mo [Nm]	Mn [Nm]	Mp [Nm]	Np [rpm]	Nmax [rpm]
FM075E3A20	2000	1.44	1.3	4.32	283	2444
FM075E3A30	3000	1.44	1.3	4.32	1503	3666
FM075E3A40	4000	1.44	1.2	4.32	2316	4888
FM075E3A60	6000	1.44	1.1	4.32	4438	7333
FM075E3B20	2000	2.65	2.5	7.95	992	2444
FM075E3B30	3000	2.65	2.3	7.95	2172	3666
FM075E3B40	4000	2.65	2.1	7.95	3224	4888
FM075E3B60	6000	2.65	1.9	7.95	5354	7333
FM075E3C20	2000	3.72	3.5	11.16	1339	2444
FM075E3C30	3000	3.72	3.3	11.16	2533	3666
FM075E3C40	4000	3.72	2.8	11.16	3543	4888
FM075E3C60	6000	3.72	2.8	11.16	5685	7333
FM075E3D20	2000	4.67	4.5	14.01	1488	2444
FM075E3D30	3000	4.67	4.2	14.01	2617	3666
FM075E3D40	4000	4.67	3.8	14.01	3726	4888
FM075E3D60	6000	4.67	3.4	14.01	5976	7333
FM095E3A20	2000	2.45	2.4	7.35	779	2444
FM095E3A30	3000	2.45	2.3	7.35	1764	3666
FM095E3A40	4000	2.45	2.3	7.35	2717	4888
FM095E3A60	6000	2.45	2	7.35	4621	7333
FM095E3B20	2000	4.5	4.3	13.5	1324	2444
FM095E3B30	3000	4.5	4.1	13.5	2397	3666
FM095E3B40	4000	4.5	3.8	13.5	3349	4888
FM095E3B60	6000	4.5	3.2	13.5	5525	7333
FM095E3C20	2000	6.3	5.9	18.9	1560	2444
FM095E3C30	3000	6.3	5.6	18.9	2641	3666
FM095E3C40	4000	6.3	5.3	18.9	3518	4888
FM095E3C60	6000	6.3	4.2	18.9	5690	7333

fm 220 V	Nn [rpm]	Mo [Nm]	Mn [Nm]	Mp [Nm]	Np [rpm]	Nmax [rpm]
FM095E3D20	2000	7.9	7.3	23.7	1721	2444
FM095E3D30	3000	7.9	6.9	23.7	2816	3666
FM095E3D40	4000	7.9	6.4	23.7	3798	4888
FM095E3E20	2000	9.25	8.5	27.75	1763	2444
FM095E3E30	3000	9.25	8.2	27.75	2859	3666
FM095E3E40	4000	9.25	7.4	27.75	3962	4888
FM115E3A20	2000	3.9	3.7	11.7	875	2444
FM115E3A30	3000	3.9	3.5	11.7	1791	3666
FM115E3A40	4000	3.9	3	11.7	2448	4888
FM115E3A60	6000	3.9	2.7	11.7	3777	7333
FM115E3B20	2000	7.4	7.3	22.2	1373	2444
FM115E3B30	3000	7.4	6.7	22.2	2299	3666
FM115E3B40	4000	7.4	5.8	22.2	3115	4888
FM115E3B60	6000	7.4	5	22.2	4888	7333
FM115E3C20	2000	10.8	10.1	32.4	1535	2444
FM115E3C30	3000	10.8	9.5	32.4	2491	3666
FM115E3C40	4000	10.8	7.5	32.4	3420	4888
FM115E3D20	2000	13.65	11.9	40.95	1436	2444
FM115E3D30	3000	13.65	11.2	40.95	2525	3666
FM115E3D40	4000	13.65	8.3	40.95	3627	4888
FM115E3E20	2000	16	14.1	48	1540	2444
FM115E3E30	3000	16	12.7	48	2652	3666
FM115E3E40	4000	16	8.8	48	3423	4888
FM142E3A20	2000	6.2	5.9	18.6	999	2444
FM142E3A30	3000	6.2	5.5	18.6	1841	3666
FM142E3A40	4000	6.2	4.1	18.6	2574	4888
FM142E3A60	6000	6.2	3.2	18.6	4147	7333
FM142E3B20	2000	11	10.4	33	1477	2444
FM142E3B30	3000	11	9.5	33	2369	3666
FM142E3B40	4000	11	8.1	33	3312	4888
FM142E3C20	2000	15.7	14.7	47.1	1634	2444
FM142E3C30	3000	15.7	12.8	47.1	2591	3666
FM142E3C40	4000	15.7	10.2	47.1	3298	4888
FM142E3D20	2000	20.5	18.5	61.5	1731	2444
FM142E3D30	3000	20.5	16	61.5	2477	3666
FM142E3D40	4000	20.5	12.2	61.5	3287	4888
FM142E3E20	2000	25	21.5	75	1730	2444
FM142E3E30	3000	25	18.2	75	2752	3666
FM142E3E40	4000	25	14	75	3807	4888
FM190E3A20	2000	11.25	10.8	33.75	1067	2444
FM190E3A30	3000	11.25	10.3	33.75	1670	3666
FM190E3A40	4000	11.25	8.2	33.75	2345	4888
FM190E3B20	2000	22.5	20.6	67.5	1256	2444
FM190E3B30	3000	22.5	19.4	67.5	1774	3666
FM190E3B40	4000	22.5	18.2	67.5	2414	4888
FM190E3C20	2000	33.5	29.4	100.5	1310	2444
FM190E3C30	3000	33.5	26.5	100.5	1876	3666
FM190E3C40	4000	33.5	23	100.5	2533	4888
FM190E3D20	2000	44.5	37.9	133.5	1449	2444
FM190E3D30	3000	44.5	33.2	133.5	1916	3666
FM190E3D40	4000	44.5	29	133.5	2700	4888
FM190E3E20	2000	54	44.3	162	1363	2444
FM190E3E30	3000	54	34.2	162	1867	3666
FM190E3F20	2000	63	50.5	189	1351	2444
FM190E3F30	3000	63	35.2	189	2062	3666
FM190E3G20	2000	71	54	213	1350	2444
FM190E3G30	3000	71	36.2	213	1682	3666
FM190E3H20	2000	77	56	231	1350	2444
FM190E3H30	3000	77	37	231	2201	3666

7.1 UNIMOTOR FM

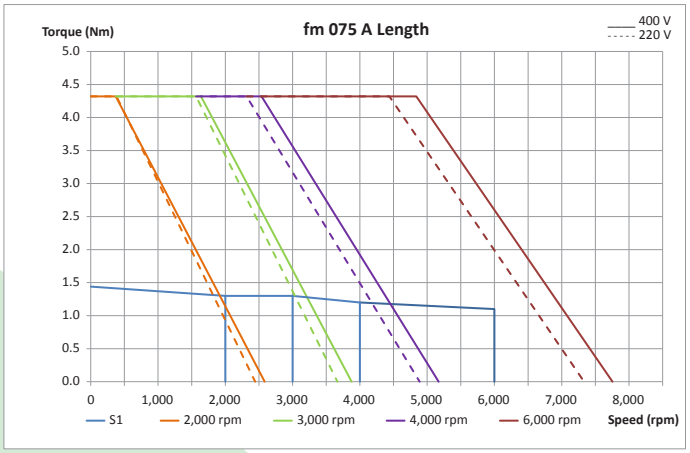

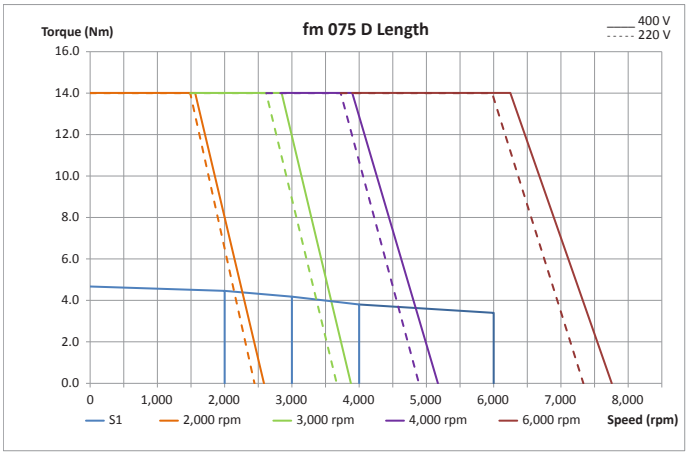

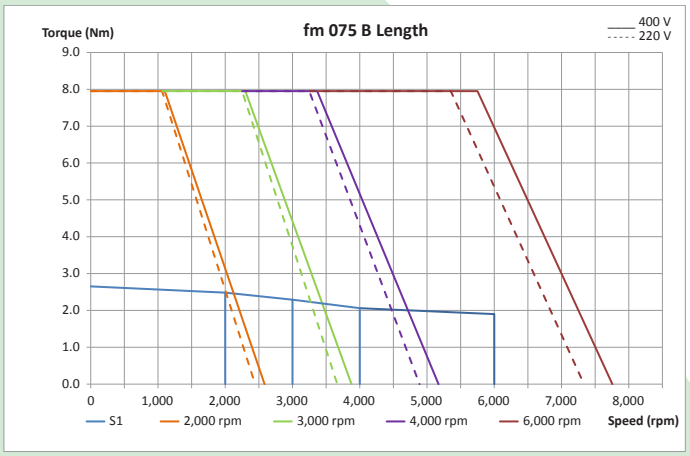

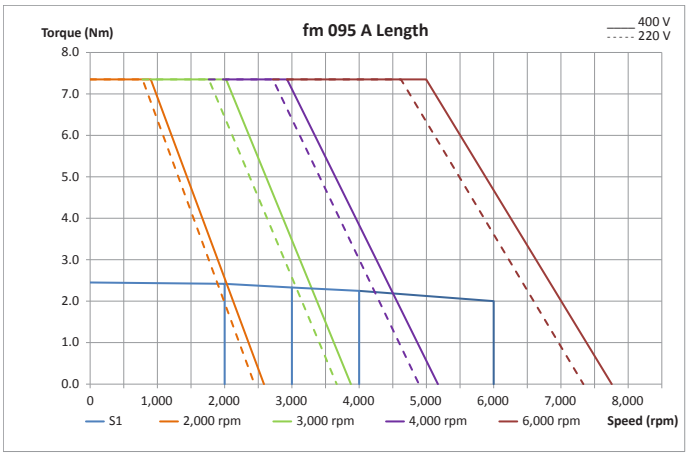

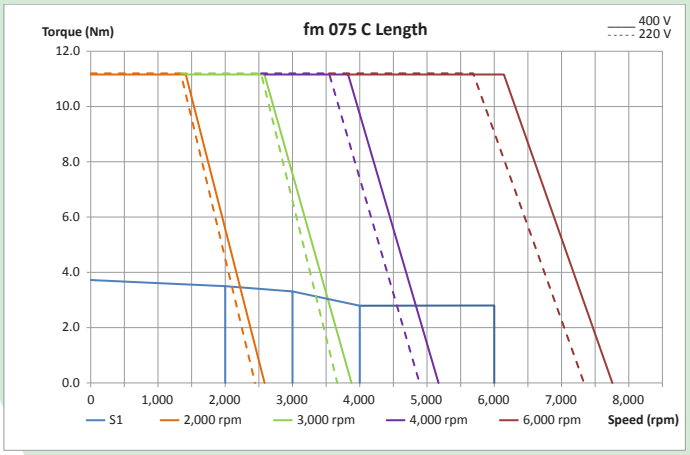

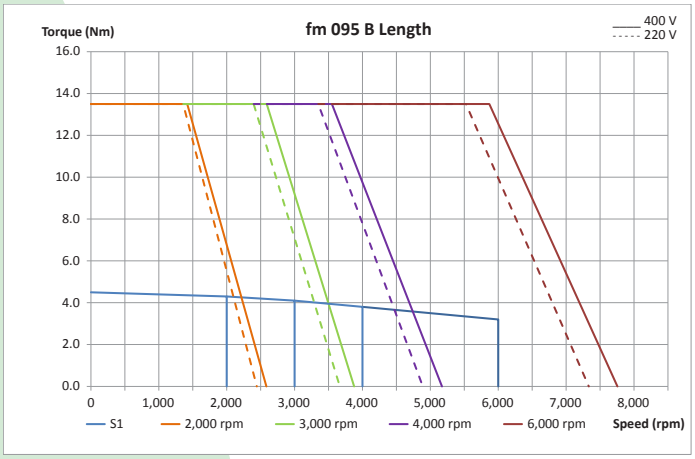

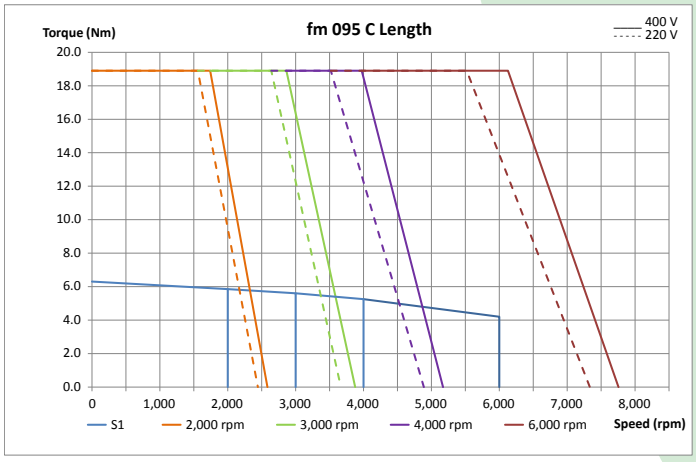
fm 095 C Length
Torque (Nm)
400 V
220 V
20.0
18.0
16.0
14.0
12.0
10.0
8.0
6.0
4.0
2.0
0.0
0
1,000
2,000
3,000
4,000
5,000
6,000
7,000
8,000
S1
2,000 rpm
3,000 rpm
4,000 rpm
6,000 rpm
Speed (rpm)

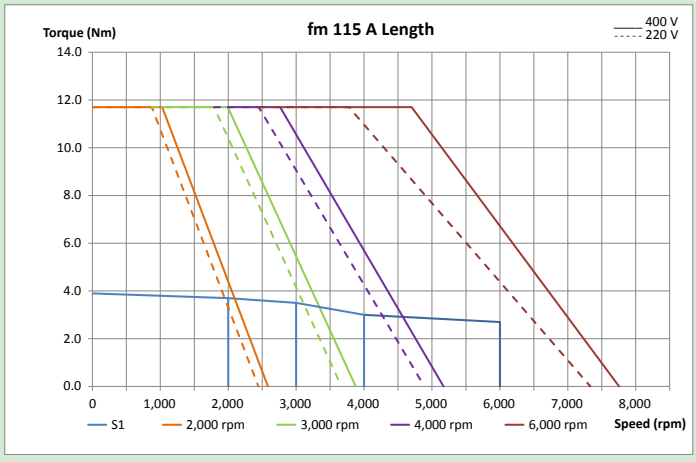
fm 115 A Length
Torque (Nm)
400 V
220 V
14.0
12.0
10.0
8.0
6.0
4.0
2.0
0.0
0
1,000
2,000
3,000
4,000
5,000
6,000
7,000
8,000
S1
2,000 rpm
3,000 rpm
4,000 rpm
6,000 rpm
Speed (rpm)

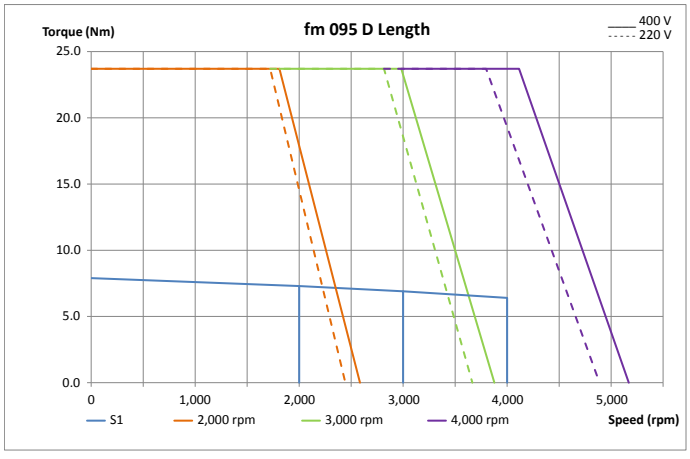
fm 095 D Length
Torque (Nm)
400 V
220 V
25.0
20.0
15.0
10.0
5.0
0.0
0
1,000
2,000
3,000
4,000
5,000
S1
2,000 rpm
3,000 rpm
4,000 rpm
Speed (rpm)

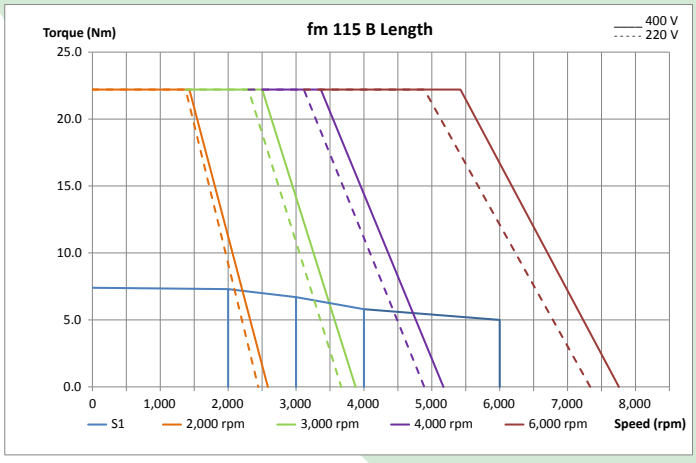
fm 115 B Length
Torque (Nm)
400 V
220 V
25.0
20.0
15.0
10.0
5.0
0.0
0
1,000
2,000
3,000
4,000
5,000
6,000
7,000
8,000
S1
2,000 rpm
3,000 rpm
4,000 rpm
6,000 rpm
Speed (rpm)

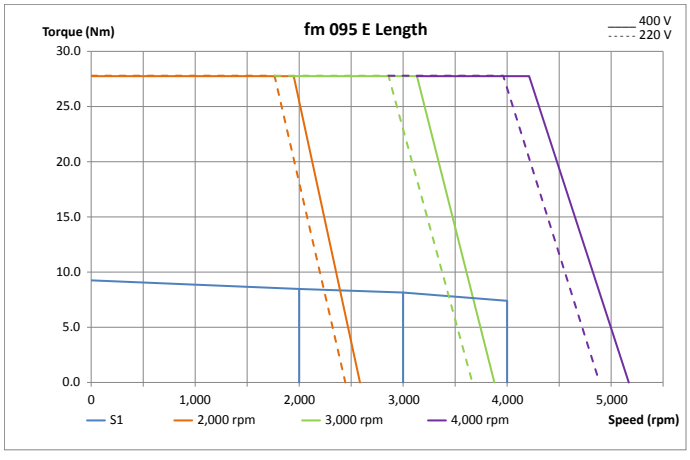
fm 095 E Length
Torque (Nm)
400 V
220 V
30.0
25.0
20.0
15.0
10.0
5.0
0.0
0
1,000
2,000
3,000
4,000
5,000
S1
2,000 rpm
3,000 rpm
4,000 rpm
Speed (rpm)

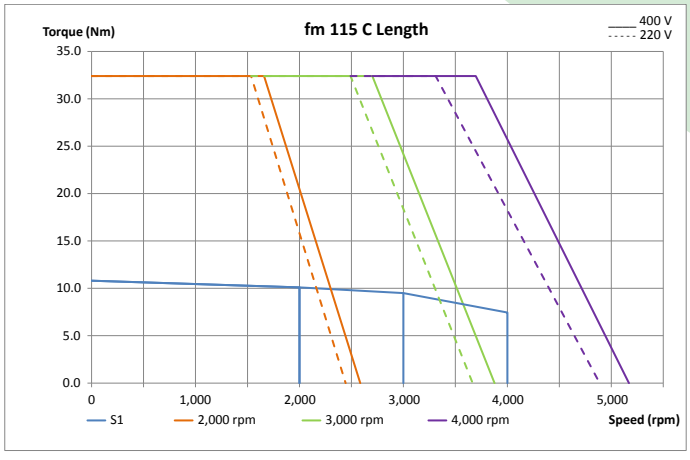
fm 115 C Length
Torque (Nm)
400 V
220 V
35.0
30.0
25.0
20.0
15.0
10.0
5.0
0.0
0
1,000
2,000
3,000
4,000
5,000
S1
2,000 rpm
3,000 rpm
4,000 rpm
Speed (rpm)

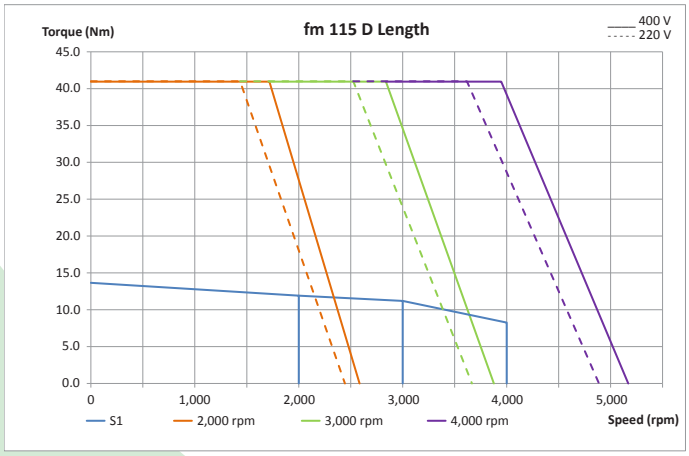
fm 115 D Length
Torque (Nm)
400 V
220 V
45.0
40.0
35.0
30.0
25.0
20.0
15.0
10.0
5.0
0.0
0
1,000
2,000
3,000
4,000
5,000
S1
2,000 rpm
3,000 rpm
4,000 rpm
Speed (rpm)

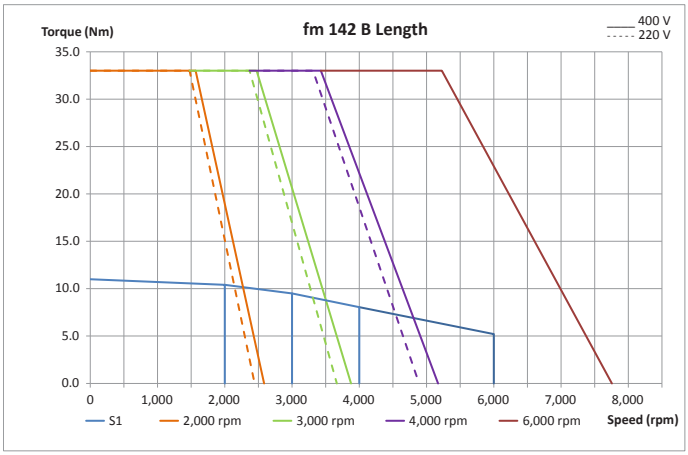
fm 142 B Length
Torque (Nm)
400 V
220 V
35.0
30.0
25.0
20.0
15.0
10.0
5.0
0.0
0
1,000
2,000
3,000
4,000
5,000
6,000
7,000
8,000
S1
2,000 rpm
3,000 rpm
4,000 rpm
6,000 rpm
Speed (rpm)

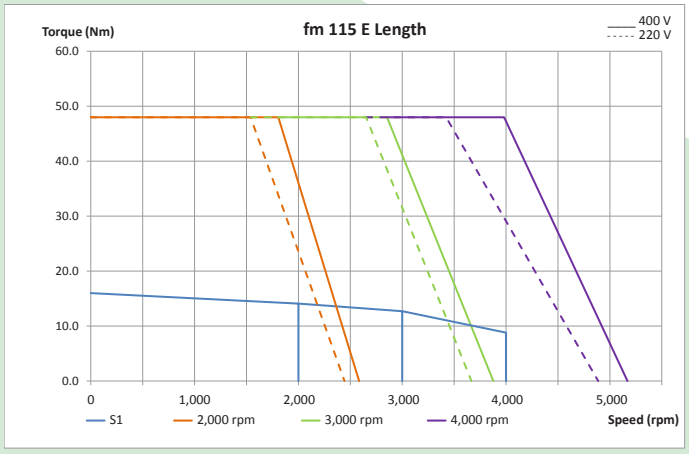
fm 115 E Length
Torque (Nm)
400 V
220 V
60.0
50.0
40.0
30.0
20.0
10.0
0.0
0
1,000
2,000
3,000
4,000
5,000
S1
2,000 rpm
3,000 rpm
4,000 rpm
Speed (rpm)

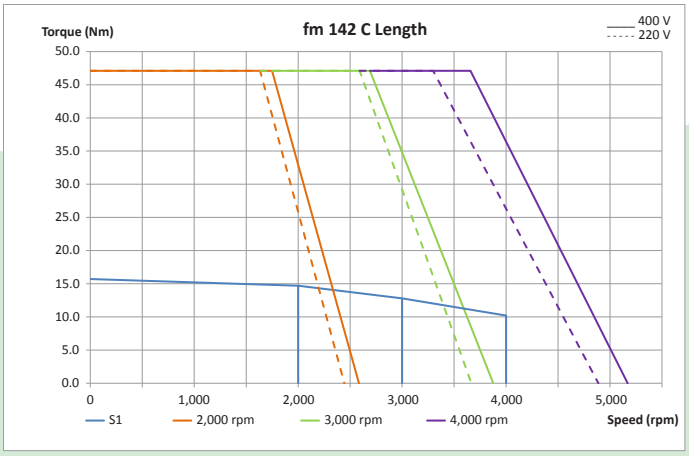
fm 142 C Length
Torque (Nm)
400 V
220 V
50.0
45.0
40.0
35.0
30.0
25.0
20.0
15.0
10.0
5.0
0.0
0
1,000
2,000
3,000
4,000
5,000
S1
2,000 rpm
3,000 rpm
4,000 rpm
Speed (rpm)

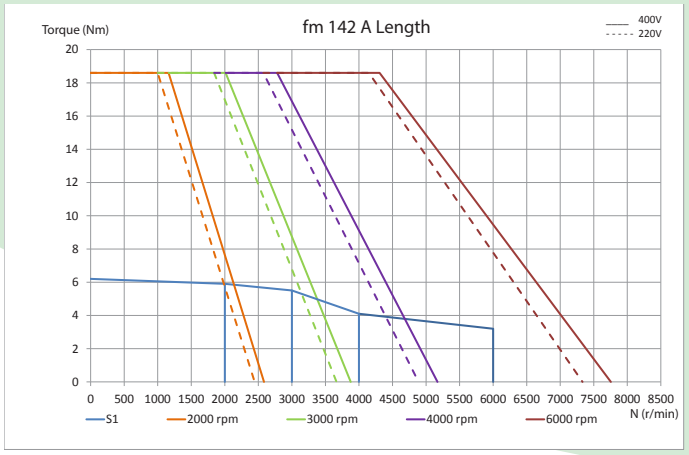
fm 142 A Length
Torque (Nm)
400V
220V
20
18
16
14
12
10
8
6
4
2
0
0
500
1000
1500
2000
2500
3000
3500
4000
4500
5000
5500
6000
6500
7000
7500
8000
8500
N (r/min)
S1
2000 rpm
3000 rpm
4000 rpm
6000 rpm

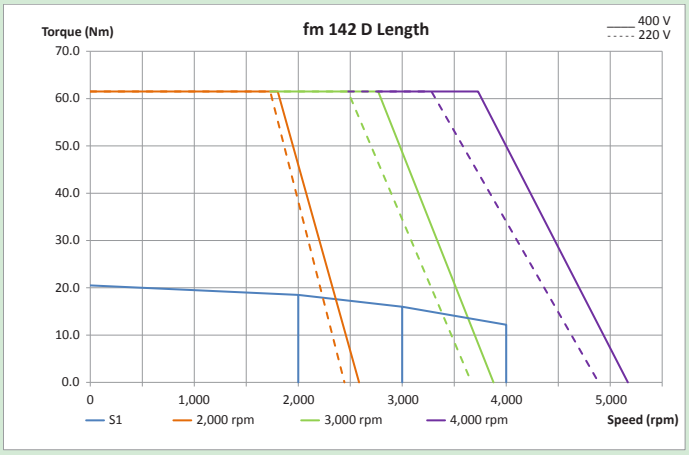
fm 142 D Length
Torque (Nm)
400 V
220 V
70.0
60.0
50.0
40.0
30.0
20.0
10.0
0.0
0
1,000
2,000
3,000
4,000
5,000
S1
2,000 rpm
3,000 rpm
4,000 rpm
Speed (rpm)

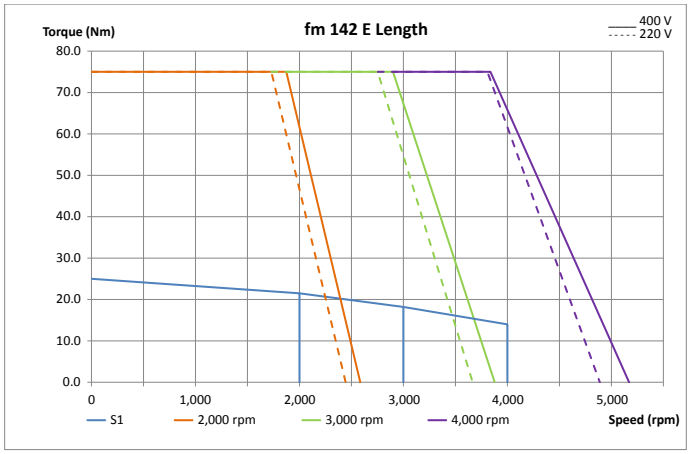
fm 142 E Length
Torque (Nm)
400 V
220 V
80.0
70.0
60.0
50.0
40.0
30.0
20.0
10.0
0.0
0
1,000
2,000
3,000
4,000
5,000
S1
2,000 rpm
3,000 rpm
4,000 rpm
Speed (rpm)

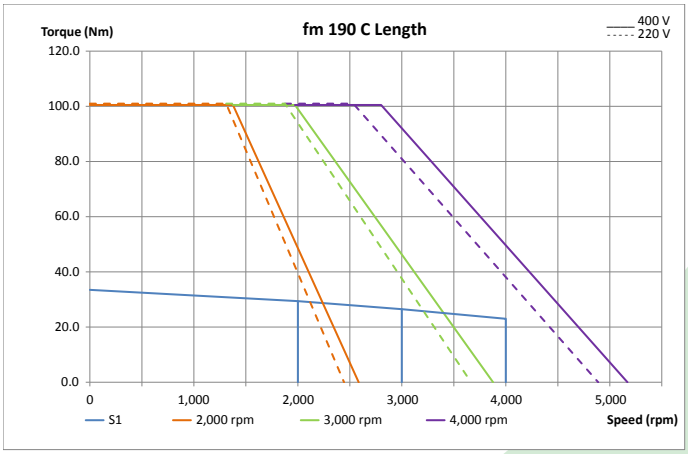
fm 190 C Length
Torque (Nm)
400 V
220 V
120.0
100.0
80.0
60.0
40.0
20.0
0.0
0
1,000
2,000
3,000
4,000
5,000
S1
2,000 rpm
3,000 rpm
4,000 rpm
Speed (rpm)

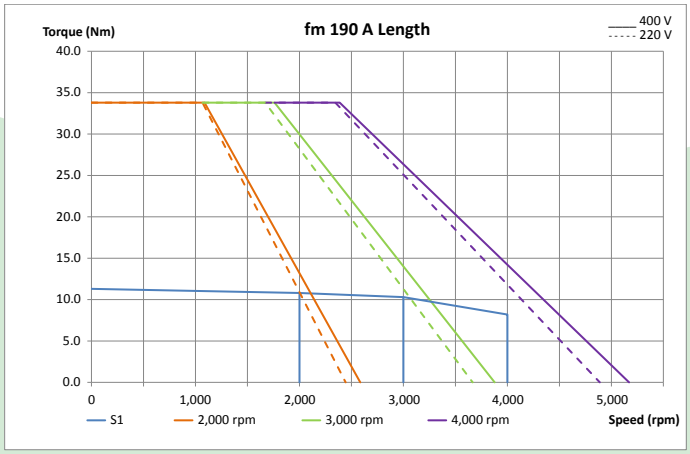
fm 190 A Length
Torque (Nm)
400 V
220 V
40.0
35.0
30.0
25.0
20.0
15.0
10.0
5.0
0.0
0
1,000
2,000
3,000
4,000
5,000
S1
2,000 rpm
3,000 rpm
4,000 rpm
Speed (rpm)

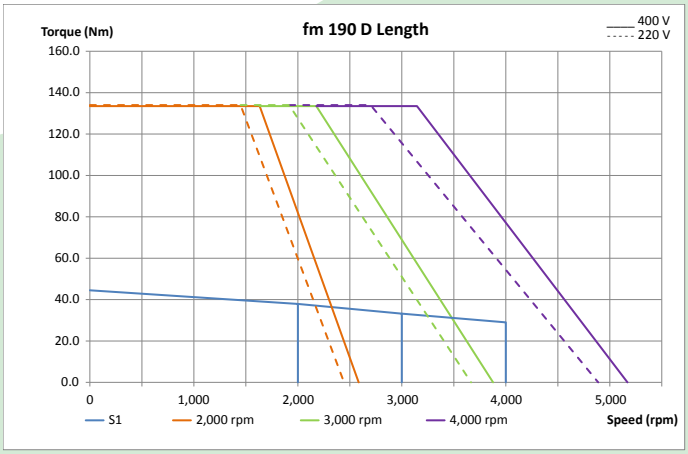
fm 190 D Length
Torque (Nm)
400 V
220 V
160.0
140.0
120.0
100.0
80.0
60.0
40.0
20.0
0.0
0
1,000
2,000
3,000
4,000
5,000
S1
2,000 rpm
3,000 rpm
4,000 rpm
Speed (rpm)

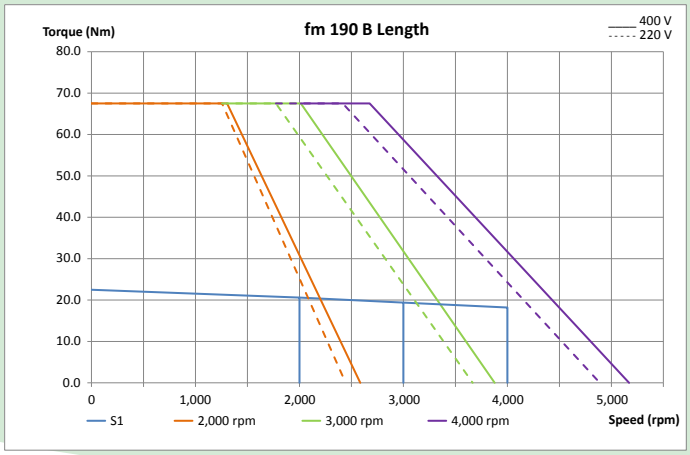
fm 190 B Length
Torque (Nm)
400 V
220 V
80.0
70.0
60.0
50.0
40.0
30.0
20.0
10.0
0.0
0
1,000
2,000
3,000
4,000
5,000
S1
2,000 rpm
3,000 rpm
4,000 rpm
Speed (rpm)

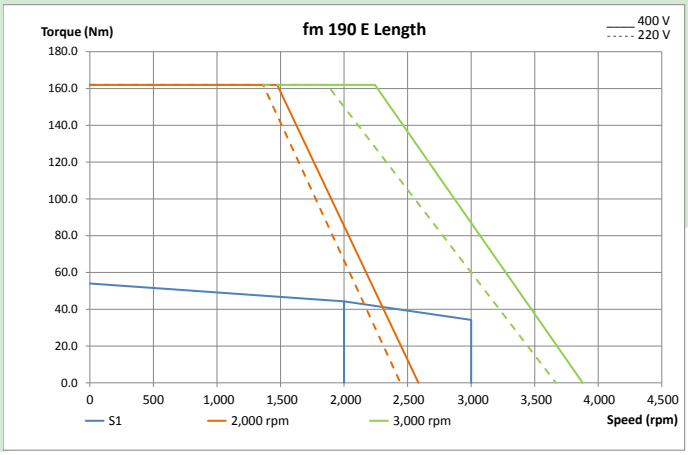
fm 190 E Length
Torque (Nm)
400 V
220 V
180.0
160.0
140.0
120.0
100.0
80.0
60.0
40.0
20.0
0.0
0
500
1,000
1,500
2,000
2,500
3,000
3,500
4,000
4,500
S1
2,000 rpm
3,000 rpm
Speed (rpm)

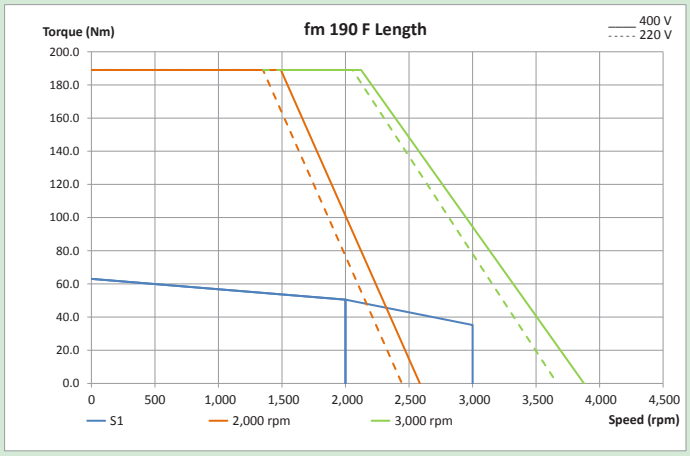
fm 190 F Length
Torque (Nm)
400 V
220 V
200.0
180.0
160.0
140.0
120.0
100.0
80.0
60.0
40.0
20.0
0.0
0
500
1,000
1,500
2,000
2,500
3,000
3,500
4,000
4,500
S1
2,000 rpm
3,000 rpm
Speed (rpm)

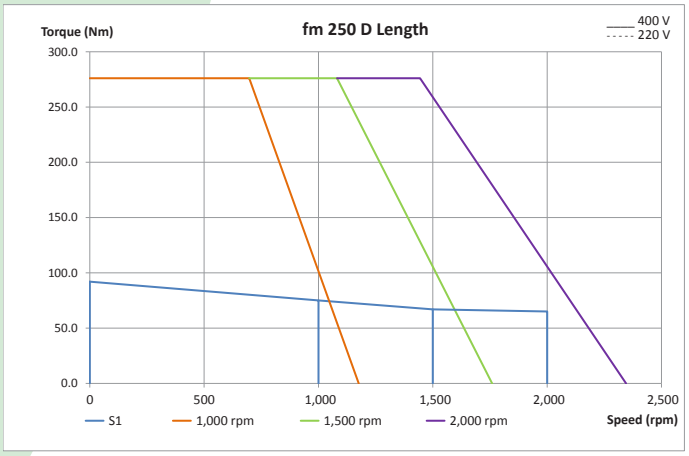
fm 250 D Length
Torque (Nm)
400 V
220 V
300.0
250.0
200.0
150.0
100.0
50.0
0.0
0
500
1,000
1,500
2,000
2,500
S1
1,000 rpm
1,500 rpm
2,000 rpm
Speed (rpm)

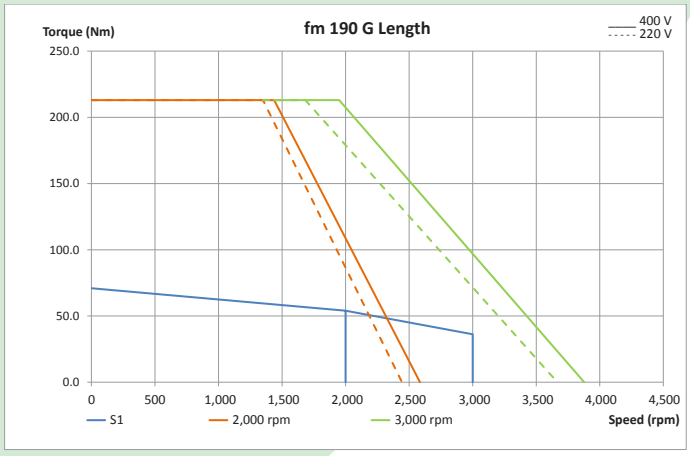
fm 190 G Length
Torque (Nm)
400 V
220 V
250.0
200.0
150.0
100.0
50.0
0.0
0
500
1,000
1,500
2,000
2,500
3,000
3,500
4,000
4,500
S1
2,000 rpm
3,000 rpm
Speed (rpm)

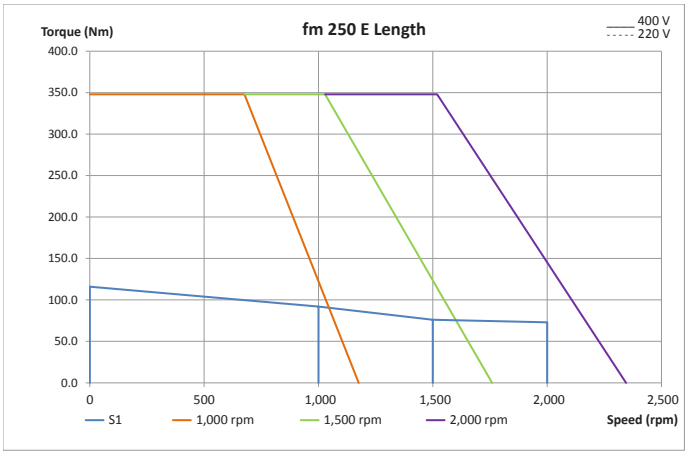
fm 250 E Length
Torque (Nm)
400 V
220 V
400.0
350.0
300.0
250.0
200.0
150.0
100.0
50.0
0.0
0
500
1,000
1,500
2,000
2,500
S1
1,000 rpm
1,500 rpm
2,000 rpm
Speed (rpm)

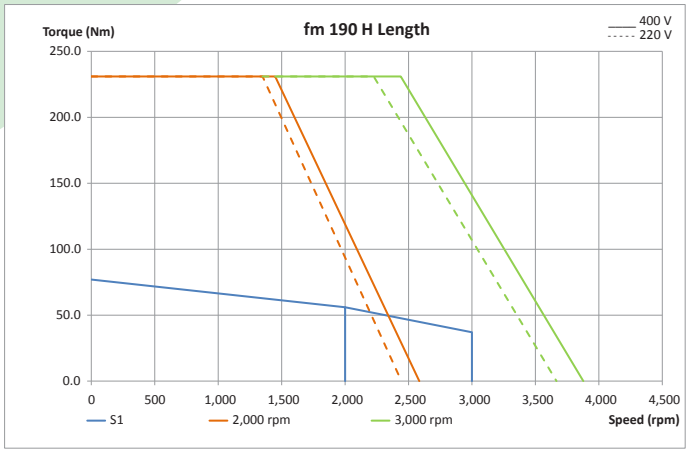
fm 190 H Length
Torque (Nm)
400 V
220 V
250.0
200.0
150.0
100.0
50.0
0.0
0
500
1,000
1,500
2,000
2,500
3,000
3,500
4,000
4,500
S1
2,000 rpm
3,000 rpm
Speed (rpm)

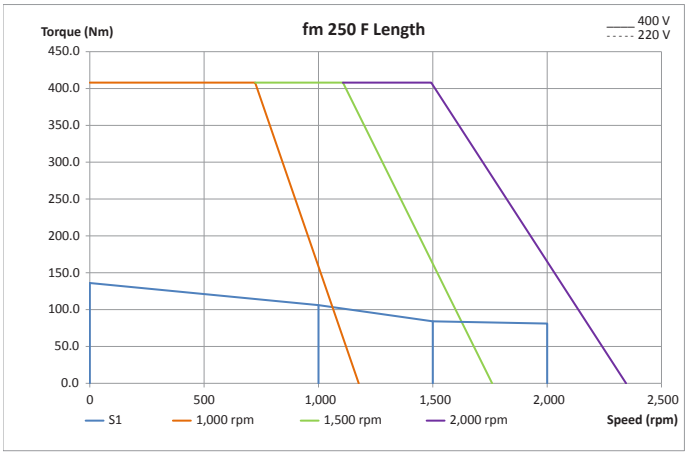
fm 250 F Length
Torque (Nm)
400 V
220 V
450.0
400.0
350.0
300.0
250.0
200.0
150.0
100.0
50.0
0.0
0
500
1,000
1,500
2,000
2,500
S1
1,000 rpm
1,500 rpm
2,000 rpm
Speed (rpm)

7.2 UNIMOTOR HD

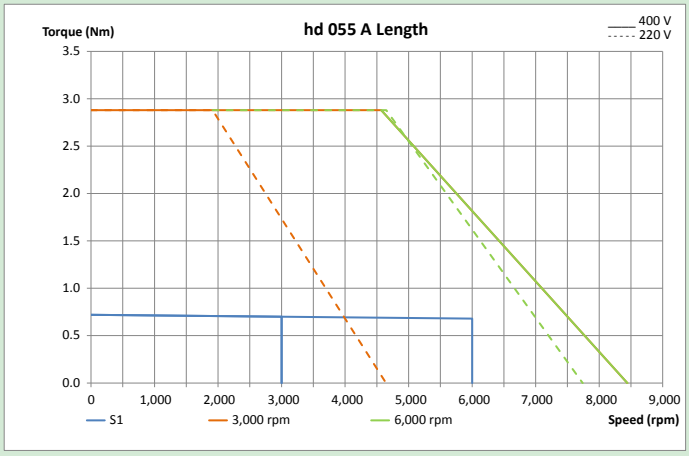

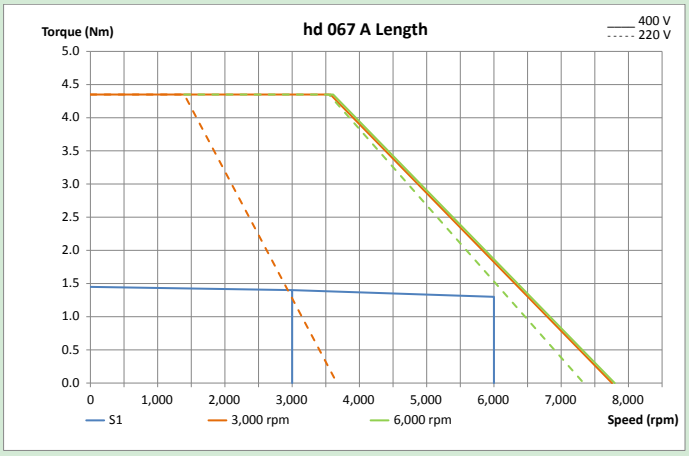

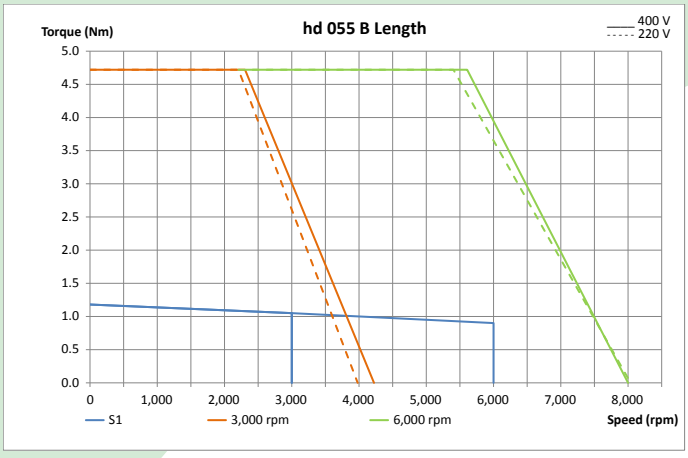

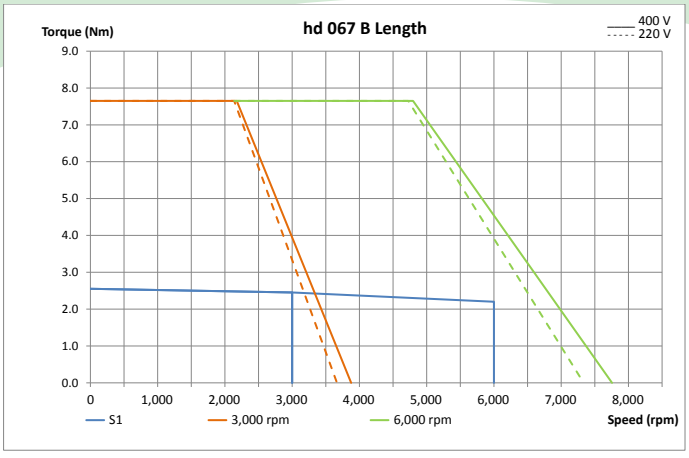

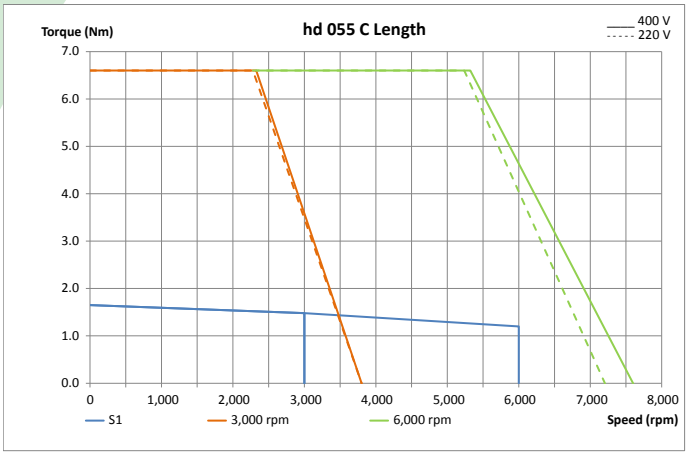

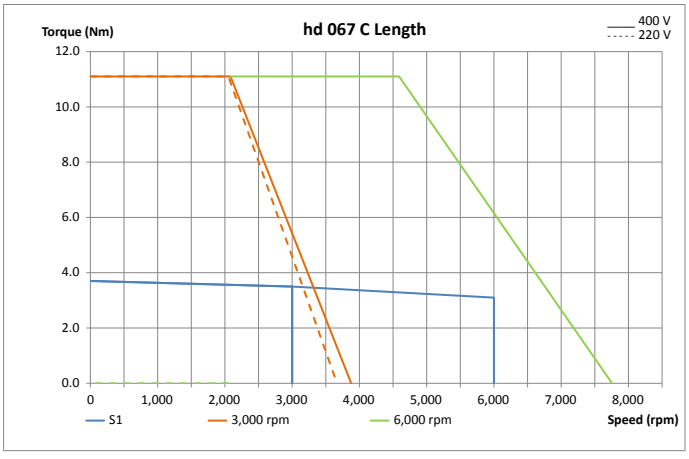

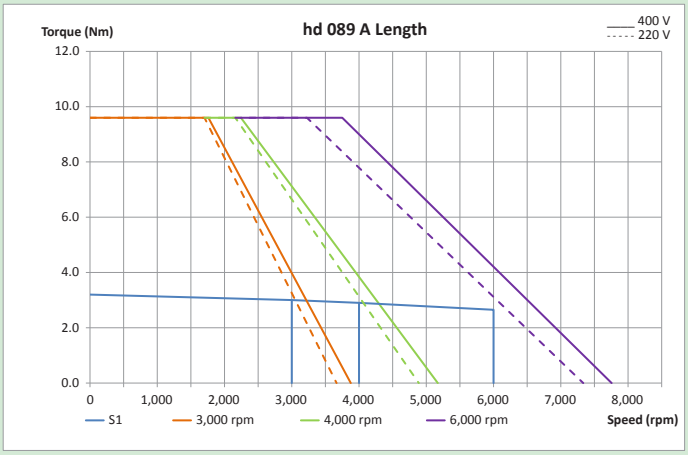
hd 089 A Length
Torque (Nm)
400 V
220 V
12.0
10.0
8.0
6.0
4.0
2.0
0.0
0
1,000
2,000
3,000
4,000
5,000
6,000
7,000
8,000
S1
3,000 rpm
4,000 rpm
6,000 rpm
Speed (rpm)

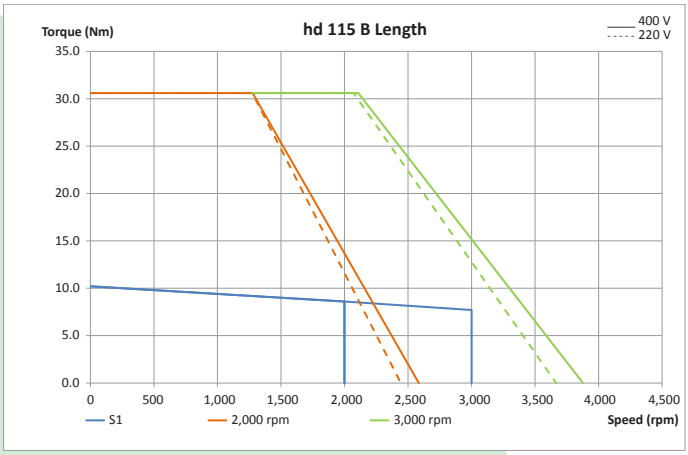
hd 115 B Length
Torque (Nm)
400 V
220 V
35.0
30.0
25.0
20.0
15.0
10.0
5.0
0.0
0
500
1,000
1,500
2,000
2,500
3,000
3,500
4,000
4,500
S1
2,000 rpm
3,000 rpm
Speed (rpm)

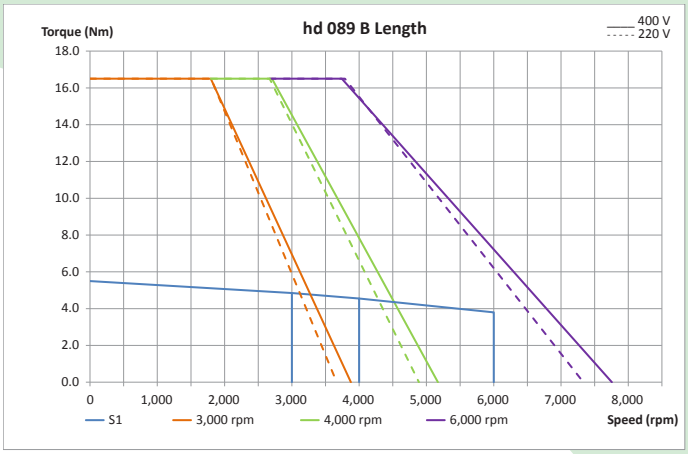
hd 089 B Length
Torque (Nm)
400 V
220 V
18.0
16.0
14.0
12.0
10.0
8.0
6.0
4.0
2.0
0.0
0
1,000
2,000
3,000
4,000
5,000
6,000
7,000
8,000
S1
3,000 rpm
4,000 rpm
6,000 rpm
Speed (rpm)

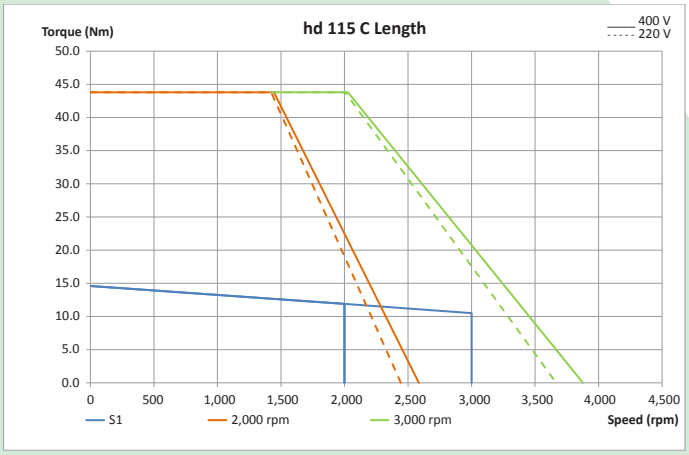
hd 115 C Length
Torque (Nm)
400 V
220 V
50.0
45.0
40.0
35.0
30.0
25.0
20.0
15.0
10.0
5.0
0.0
0
500
1,000
1,500
2,000
2,500
3,000
3,500
4,000
4,500
S1
2,000 rpm
3,000 rpm
Speed (rpm)

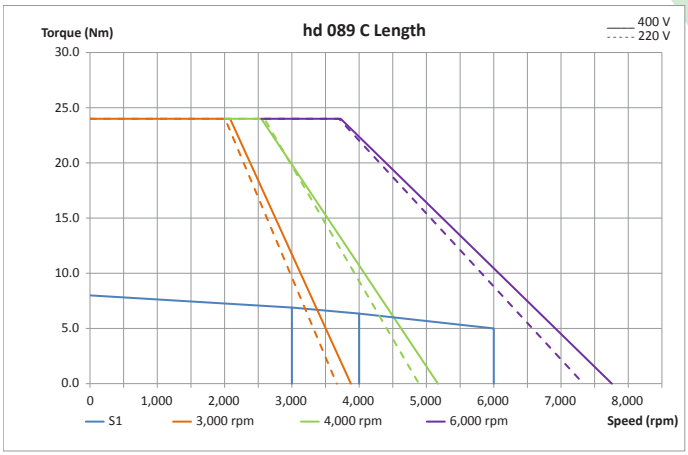
hd 089 C Length
Torque (Nm)
400 V
220 V
30.0
25.0
20.0
15.0
10.0
5.0
0.0
0
1,000
2,000
3,000
4,000
5,000
6,000
7,000
8,000
S1
3,000 rpm
4,000 rpm
6,000 rpm
Speed (rpm)

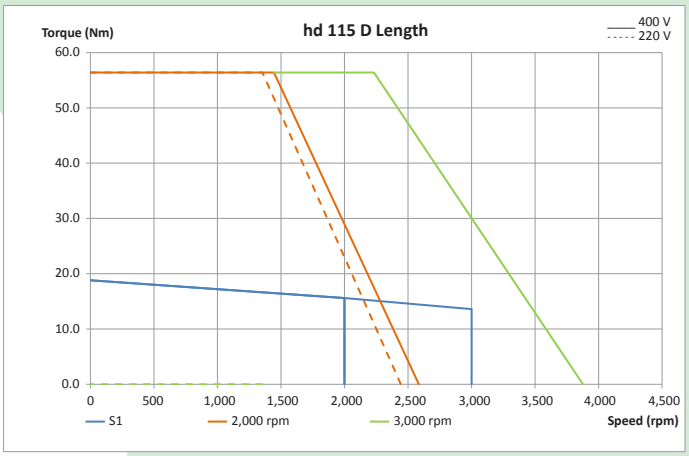
hd 115 D Length
Torque (Nm)
400 V
220 V
60.0
50.0
40.0
30.0
20.0
10.0
0.0
0
500
1,000
1,500
2,000
2,500
3,000
3,500
4,000
4,500
S1
2,000 rpm
3,000 rpm
Speed (rpm)

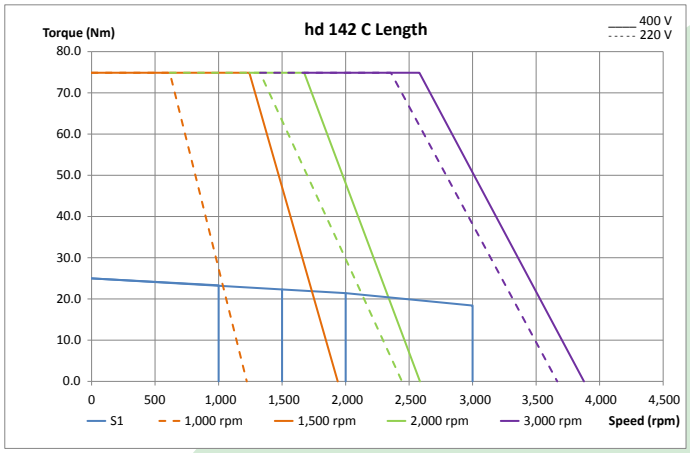
hd 142 C Length
Torque (Nm)
400 V
220 V
80.0
70.0
60.0
50.0
40.0
30.0
20.0
10.0
0.0
0
500
1,000
1,500
2,000
2,500
3,000
3,500
4,000
4,500
S1
1,000 rpm
1,500 rpm
2,000 rpm
3,000 rpm
Speed (rpm)

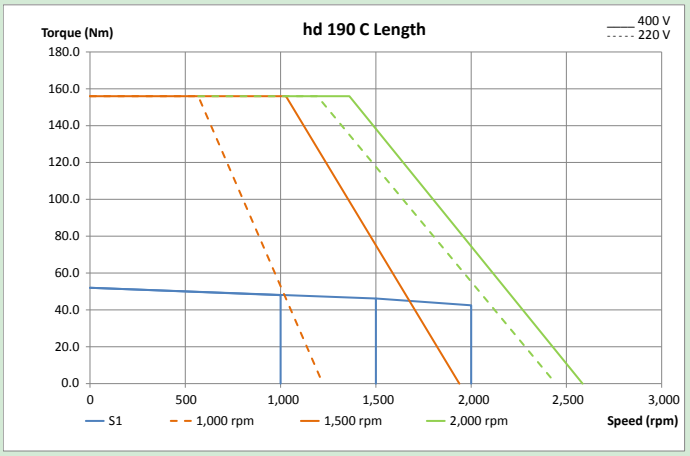
hd 190 C Length
Torque (Nm)
400 V
220 V
180.0
160.0
140.0
120.0
100.0
80.0
60.0
40.0
20.0
0.0
0
500
1,000
1,500
2,000
2,500
3,000
S1
1,000 rpm
1,500 rpm
2,000 rpm
Speed (rpm)

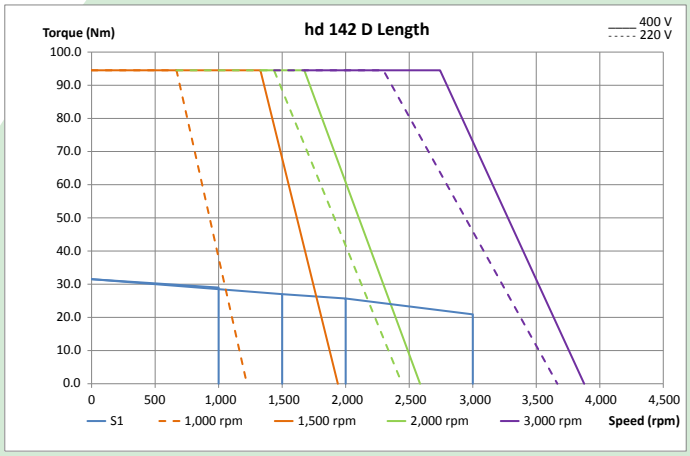
hd 142 D Length
Torque (Nm)
400 V
220 V
100.0
90.0
80.0
70.0
60.0
50.0
40.0
30.0
20.0
10.0
0.0
0
500
1,000
1,500
2,000
2,500
3,000
3,500
4,000
4,500
S1
1,000 rpm
1,500 rpm
2,000 rpm
3,000 rpm
Speed (rpm)

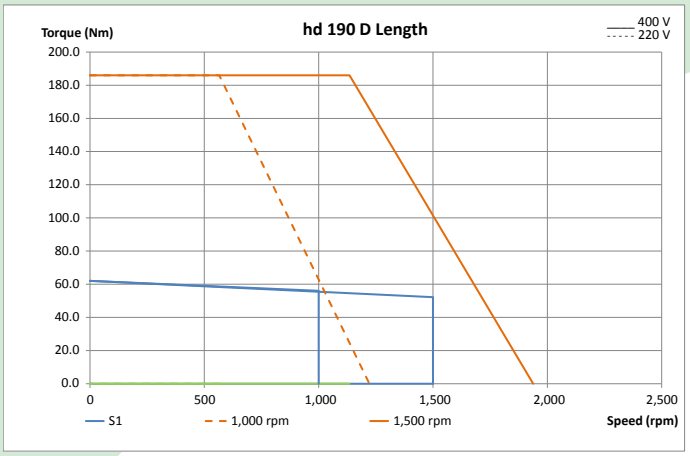
hd 190 D Length
Torque (Nm)
400 V
220 V
200.0
180.0
160.0
140.0
120.0
100.0
80.0
60.0
40.0
20.0
0.0
0
500
1,000
1,500
2,000
2,500
S1
1,000 rpm
1,500 rpm
Speed (rpm)

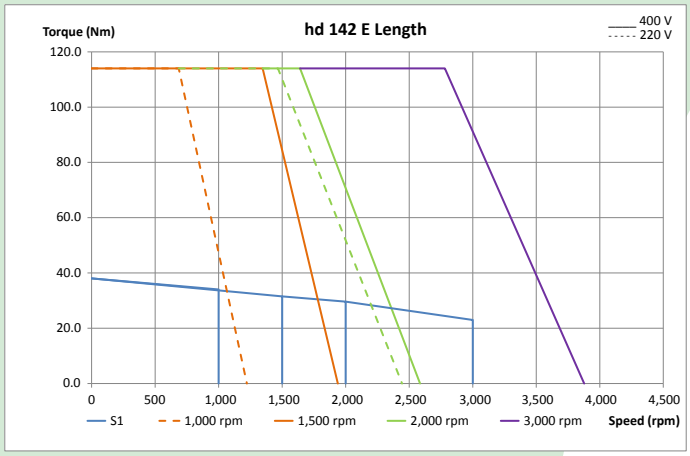
hd 142 E Length
Torque (Nm)
400 V
220 V
120.0
100.0
80.0
60.0
40.0
20.0
0.0
0
500
1,000
1,500
2,000
2,500
3,000
3,500
4,000
4,500
S1
1,000 rpm
1,500 rpm
2,000 rpm
3,000 rpm
Speed (rpm)

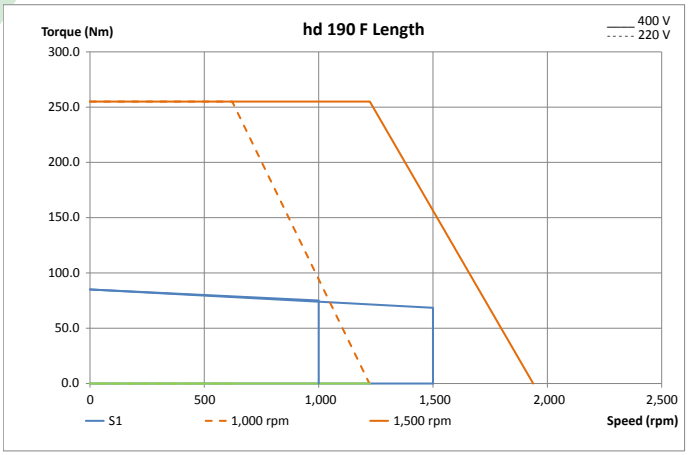
hd 190 F Length
Torque (Nm)
400 V
220 V
300.0
250.0
200.0
150.0
100.0
50.0
0.0
0
500
1,000
1,500
2,000
2,500
S1
1,000 rpm
1,500 rpm
Speed (rpm)

8 Unidrive M & Digitax HD servo drives for continuous & pulse duty applications

8.1 UNIDRIVE M700 - CONTINUOUS DUTY

0.7 Nm – 136 Nm (408 Nm peak)

Unidrive M700 is an AC and servo drive optimized for continuous duty. Unidrive M700 offers class leading servo and induction motor performance with onboard real-time Ethernet. The drive provides high performance motor control to satisfy the requirements of machine builders and high performance industrial applications.

8.1.1 Benefits

Maximize throughput with superior motor control

- High bandwidth motor control algorithm for open and closed-loop induction, permanent magnet and servo motors
- Flexible speed and position feedback interface supports a wide range of feedback technologies from robust resolvers to high resolution encoders
  - Up to three encoder channels simultaneously e.g. 1 feedback encoder, 1 reference encoder and 1 simulated output
  - Quadrature, SinCos (including absolute), communication based encoders (up to 4 Mb), line compensation (up to 100 m), EnDat 2.2, HIPERFACE, SSI and resolvers
  - Simulated encoder output can provide position reference for CAMs, digital lock and electronic gearbox applications

Optimize system performance with onboard Advanced Motion Controller

- M700 incorporates an Advanced Motion Controller capable of controlling 1.5 axis. The motion functions are carried out 'on the drive' so that system performance is maximized.

Design flexible centralized and decentralized control systems

- MCi modules can be added to execute larger programs for advanced system control capability
- Engineering Control Studio is an industry standard IEC61131-3 programming environment for efficient system design and configuration
- Integrated dual port Ethernet switch provides simple connectivity using standard connections
- Onboard real-time Ethernet (IEEE 1588 V2) uses RTMoE (Real Time Motion over Ethernet) to provide fast communication and accurate axis synchronization
- Three 'SI' ports are available to fit additional fieldbus, position feedback and I/O options

Flexible machine design with options modules

Unidrive M700 can be tailored for a wide variety of demanding servo and induction applications. The drive has three option slots for System Integration modules, giving maximum flexibility

- Machine control: MCi200, MCi210, SI-Applications Plus
- Communications: SI-Ethernet, SI-PROFINET RT, SI-EtherCAT, SI-CANopen, SI-PROFIBUS, SI-DeviceNet
- Safety: SI-Safety
- Additional I/O: SI-I/O
- Feedback: SI-Encoder, SI-Universal Encoder
- 15 way D-type converter
- Single ended encoder interface (15 V or 24 V)

Conform to safety standards, maximize uptime and reduce costs by integrating directly with safety systems

- M700 has an integrated STO input and can accommodate an SI-Safety module for safe motion functions

Auxiliary power system flexibility

- Unidrive M can run with a wider operating DC voltage input, from 24 V up to maximum rated Volts providing optimum choice of auxiliary power supply for back-up purposes

8.1.2 Unidrive M700 variants: M701 and M702

Unidrive M701

Unidrive M701 has 2 x RS485 ports onboard instead of Ethernet. Parameter sets can be ported to Unidrive M using a smartcard or Unidrive M connect. Unidrive M701 is a direct upgrade for Unidrive SP users.

Unidrive M702 – Enhanced Safety

Unidrive M702 has an additional STO input for applications that require onboard Ethernet and dual STO to comply with SIL 3 PLe.

8.2 DIGITAX HD - PULSE DUTY

0.72 Nm – 18.8 Nm (56.4 Nm peak)

The new Digitax HD range brings ultimate performance to high dynamic, pulse duty applications, where high peak torque is required for fast acceleration.

8.2.1 Benefits

Maximize throughput with superior motor control

- High bandwidth motor control algorithm for servo motors
- Flexible speed and position feedback interface supports a wide range of feedback technologies from robust resolvers to high resolution encoders
  - Up to three encoder channels simultaneously e.g. 1 feedback encoder, 1 reference encoder and 1 simulated output
  - Quadrature, SinCos (including absolute), communication based encoders (up to 4 Mb), line compensation (up to 100 m), EnDat 2.2, HIPERFACE, SSI and resolvers
  - Simulated encoder output can provide position reference for CAMs, digital lock and electronic gearbox applications
- Optimum performance for high-dynamic applications with 300 % motor torque overload

Reduce cabinet size with Ultraflow™ thermal management

- Reduce cabinet height by directly stacking rows of drives. Control Techniques' patented Ultraflow™ technology expels heat directly outside of the cabinet through the rear of the drive* and removes heat build-up in the cabinet
  - Combined with conformal coating, Ultraflow™ minimizes contamination risk as a result of guided internal airflow, which prevents ingress on drive circuits
  - An intelligently controlled fan minimizes acoustic noise and optimizes fan lifetime, while contributing to the maximum thermal cooling by Ultraflow™
  - Ultraflow™ requires only a 32 mm hole in the cabinet meaning rapid, trouble-free installation

Flexible machine design with option modules

Digitax drives can be tailored for a variety of applications. The options slot allows increasing capabilities.

- Communications: SI-Ethernet, Ethernet/IP, SI-PROFIBUS, SI-DeviceNet, SI-CANopen, SI-EtherCAT, SI-PROFINET
- Feedback: SI-Universal Encoder, SI-Encoder
- SI-I/O: Extended I/O interface module to increase the number of I/O analog and digital points on a drive
- Applications: MCi200, MCi210, SI-Apps Compact
- Safety: SI-Safety
- 15 way D-type converter
- Single ended encoder interface (15 V or 24 V)

Reduced commissioning time

- The Connect PC tool is for rapid commissioning, plus optimizing and monitoring drive/system performance
  - Autotune ensures the best performance by measuring machine dynamics and automatically optimizing control loop gains
  - CTScope – a realtime software oscilloscope – is supplied for tuning and monitoring
  - Dynamic drive logic diagrams and enhanced searchable listings tool is scalable to match application requirements
  - Drive discovery gives the ability to find drives on a network automatically without the user having to specify their addresses
- Standard SD cards can be used for quick and easy parameter and program storage

Quicker installation

- The bottom of the drive can be quickly clipped onto a standard DIN rail
- The cable mounting system features rigid mounting and grounding brackets
- Pluggable control terminals enable looms to be easily prepared

8.2.2 Digitax HD is available in four variants:

- M751 Base - Base drive for configuration flexibility
- M751 + MCi210 - Intelligent drive for decentralized motion applications
- M751 + SI-Ethernet - Network drive for centralized and decentralized motion applications
- M753 EtherCAT - EtherCAT device for centralized motion control applications

8.3 DRIVE AND MOTOR COMBINATIONS

8.3.1 Unimotor fm + Unidrive M700

075E3

Drive part number				M700-03200050 A		M700-03200066 A	M700-03200080 A	M700-03200106 A		M700-04200137 A	M700-04200185 A
Drive switching frequency				12	8		12		8	12	
Rated drive current				5.0		6.6	8.0	8.8	10.6	13.7	17.6
Drive output maximal current				10.0		13.2	16.0	21.2		27.4	37.0
Rated motor speed	**Motor stall torque**	**Motor type**	**Combined drive and motor performance**								
2000	1.4	075 E3 A 20	Mo	1.4							
			Mn	1.3							
			Mmax	4.3							
	2.7	075 E3 B 20	Mo	2.7							
			Mn	2.5							
			Mmax	8.0							
	3.7	075 E3 C 20	Mo	3.7							
			Mn	3.5							
			Mmax	11.2							
	4.7	075 E3 D 20	Mo	4.7		4.7					
			Mn	4.5		4.5					
			Mmax	14.0		14.0					
3000	1.4	075 E3 A 30	Mo	1.4							
			Mn	1.3							
			Mmax	4.3							
	2.7	075 E3 B 30	Mo	2.7							
			Mn	2.3							
			Mmax	8.0							
	3.7	075 E3 C 30	Mo	3.7		3.7					
			Mn	3.3		3.3					
			Mmax	9.3		11.2					
	4.7	075 E3 D 30	Mo		4.6	4.7	4.7				
			Mn		4.1	4.2	4.2				
			Mmax		9.3	12.3	14.0				
4000	1.4	075 E3 A 40	Mo	1.4							
			Mn	1.2							
			Mmax	4.3							
	2.7	075 E3 B 40	Mo	2.7		2.7					
			Mn	2.1		2.1					
			Mmax	7.0		8.0					
	3.7	075 E3 C 40	Mo			3.7	3.7				
			Mn			2.8	2.8				
			Mmax			9.2	11.2				
	4.7	075 E3 D 40	Mo				4.7	4.7			
			Mn				3.8	3.8			
			Mmax				11.2	14.0			
6000	1.4	075 E3 A 60	Mo	1.4							
			Mn	1.1							
			Mmax	4.3							
	2.7	075 E3 B 60	Mo			2.7	2.7	2.7			
			Mn			1.9	1.9	1.9			
			Mmax			6.2	7.5	8.0			
	3.7	075 E3 C 60	Mo				3.7	3.7		3.7	
			Mn				2.8	2.8		2.8	
			Mmax				7.5	10.0		11.2	
	4.7	075 E3 D 60	Mo						4.7	4.7	4.7
			Mn						3.4	3.4	3.4
			Mmax						10.0	12.9	14.0

Key

Mo = stall torque
Mn = rated torque
Mmax = maximum torque

095E3

Drive part number			M700-03200050 A		M700-03200066 A		M700-03200080 A		M700-03200106 A		M700-04200137 A	M700-04200185 A	M700-05200250 A
Drive switching frequency			12	3	12	8	12	6	12	8		12	
Rated drive current			5.0		6.6		8.0		8.8	10.6	13.7	17.6	21.5
Drive output maximal current			10.0		13.2		16.0		21.2		27.4	37.0	50.0
Rated motor speed	**Motor stall torque**	**Motor type**	**Combined drive and motor performance**										
2000	2.5	095 E3 A 20	Mo	2.5									
			Mn	2.4									
			Mmax	7.4									
	4.5	095 E3 B 20	Mo	4.5									
			Mn	4.3									
			Mmax	13.5									
	6.3	095 E3 C 20	Mo	6.3		6.3		6.3					
			Mn	5.9		5.9		5.9					
			Mmax	14.0		18.5		18.9					
	7.9	095 E3 D 20	Mo		7.0	7.9		7.9		7.9			
			Mn		6.4	7.3		7.3		7.3			
			Mmax		14.0	18.5		22.4		23.7			
	9.3	095 E3 E 20	Mo				9.0	9.3		9.3			
			Mn				8.2	8.5		8.5			
			Mmax				18.5	22.4		27.8			
3000	2.5	095 E3 A 30	Mo	2.5									
			Mn	2.3									
			Mmax	7.4				4.5					
	4.5	095 E3 B 30	Mo	4.5		4.5		4.1					
			Mn	4.1		4.1		13.5					
			Mmax	9.3		12.3	6.1	6.3		6.3			
	6.3	095 E3 C 30	Mo				5.4	5.6		5.6			
			Mn				12.3	14.9		18.9			
			Mmax						7.4	7.9	7.9		
	7.9	095 E3 D 30	Mo						6.4	6.9	6.9		
			Mn						14.9	19.7	23.7		
			Mmax								9.0	9.3	9.3	
	9.3	095 E3 E 30	Mo								8.0	8.2	8.2	
			Mn								19.7	25.5	27.8	
			Mmax											
4000	2.5	095 E3 A 40	Mo	2.5		2.5							
			Mn	2.3		2.3							
			Mmax	7.0		7.4							
	4.5	095 E3 B 40	Mo			4.5		4.5		4.5			
			Mn			3.8		3.8		3.8			
			Mmax			9.2		11.2		13.5			
	6.3	095 E3 C 40	Mo								6.3	6.3		
			Mn								5.3	5.3		
			Mmax								14.8	18.9		
	7.9	095 E3 D 40	Mo									7.9	7.9	
			Mn									6.4	6.4	
			Mmax									19.2	23.7	
	9.3	095 E3 E 40	Mo									9.3	9.3	9.3
			Mn									7.4	7.4	7.4
			Mmax									19.2	25.9	27.8
6000	2.5	095 E3 A 60	Mo			2.5		2.5						
			Mn			2.0		2.0						
			Mmax			6.2		7.4						
	4.5	095 E3 B 60	Mo								4.5	4.5	4.5	
			Mn								3.2	3.2	3.2	
			Mmax								10.0	12.9	13.5	
	6.3	095 E3 C 60	Mo									6.3	6.3	6.3
			Mn									4.2	4.2	4.2
			Mmax									12.9	17.4	18.9

115E3

Drive part number			M700-03200050 A		M700-03200066 A	M700-03200080 A	M700-03200106 A				M700-04200137 A		M700-04200185 A	M700-05200250 A		M700-06200330 A	M700-06200440 A
Drive switching frequency			12	6		12		8	6	4	12	6	12		8	12	
Rated drive current			5.0		6.6	8.0	8.8		10.6		13.7	13.7	17.6	21.5	24.8	32.0	33.0
Drive output maximal current			10.0		13.2	16.0	21.2				27.4		37.0	50.0		66.0	88.0
Rated motor speed	**Motor stall torque**	**Motor type**	**Combined drive and motor performance**														
2000	3.9	115 E3 A 20	Mo	3.9													
			Mn	3.7													
			Mmax	11.7													
	7.4	115 E3 B 20	Mo		6.9	7.4	7.4										
			Mn		6.8	7.3	7.3										
			Mmax		14.0	18.5	22.2										
	10.8	115 E3 C 20	Mo				10.8	10.8				10.8					
			Mn				10.1	10.1				10.1					
			Mmax				22.4	29.7				32.4					
	13.7	115 E3 D 20	Mo						13.0			13.7		13.7			
			Mn						11.3			11.9		11.9			
			Mmax						29.7			38.4		41.0			
	16.0	115 E3 E 20	Mo							14.4		16.0		16.0			
			Mn							12.7		14.1		14.1			
			Mmax							29.7		38.4		48.0			
3000	3.9	115 E3 A 30	Mo	3.9		3.9											
			Mn	3.5		3.5											
			Mmax	9.3		11.7											
	7.4	115 E3 B 30	Mo				7.4	7.4				7.4					
			Mn				6.7	6.7				6.7					
			Mmax				14.9	19.7				22.2					
	10.8	115 E3 C 30	Mo								9.8	10.8		10.8			
			Mn								8.6	9.5		9.5			
			Mmax								19.7	25.5		32.4			
	13.7	115 E3 D 30	Mo										12.3	13.7	13.7		
			Mn										10.1	11.2	11.2		
			Mmax										25.5	34.4	41.0		
	16.0	115 E3 E 30	Mo											16.0	16.0	16.0	
			Mn											12.7	12.7	12.7	
			Mmax											34.4	46.5	48.0	
4000	3.9	115 E3 A 40	Mo			3.9	3.9	3.9									
			Mn			3.0	3.0	3.0									
			Mmax			9.2	11.2	11.7									
	7.4	115 E3 B 40	Mo						7.4			7.4		7.4			
			Mn						5.8			5.8		5.8			
			Mmax						14.8			19.2		22.2			
	10.8	115 E3 C 40	Mo											10.8	10.8		
			Mn											7.5	7.5		
			Mmax											25.9	32.4		
	13.7	115 E3 D 40	Mo												13.7		13.7
			Mn												8.3		8.3
			Mmax												35.0		41.0
	16.0	115 E3 E 40	Mo													16.0	16.0	16.0
			Mn													8.8	8.8	8.8
			Mmax													35.0	46.2	48.0
6000	3.9	115 E3 A 60	Mo					3.9				3.9						
			Mn					2.7				2.7						
			Mmax					10.0				11.7						
	7.4	115 E3 B 60	Mo											7.4				
			Mn											5.0				
			Mmax											17.4				

Key

Mo = stall torque
Mn = rated torque
Mmax = maximum torque

142E3

Drive part number				M700-03200050 A	M700-03200066 A		M700-03200080 A	M700-03200106 A				M700-04200137 A	
Drive switching frequency				12	8		12	8	6	3		12	6
Rated drive current				5.0	6.6		8.0	8.8	10.6			13.7	
Drive output maximal current				10.0	13.2		16.0	21.2				27.4	
Rated motor speed	**Motor stall torque**	**Motor type**	**Combined drive and motor performance**										
2000	6.2	142 E3 A 20	Mo	6.2	6.2		6.2						
			Mn	5.9	5.9		5.9						
			Mmax	14.0	18.5		18.6						
	11.0	142 E3 B 20	Mo				11.0	11.0				11.0	
			Mn				10.4	10.4				10.4	
			Mmax				22.4	29.7				33.0	
	15.7	142 E3 C 20	Mo						14.8			15.7	
			Mn						13.8			14.7	
			Mmax						29.7			38.4	
	20.5	142 E3 D 20	Mo										18.2
			Mn										16.5
			Mmax										38.4
	25.0	142 E3 E 20	Mo										
			Mn										
			Mmax										
3000	6.2	142 E3 A 30	Mo			6.0	6.2	6.2					
			Mn			5.3	5.5	5.5					
			Mmax			12.3	14.9	18.6					
	11.0	142 E3 B 30	Mo							9.6		11.0	
			Mn							8.3		9.5	
			Mmax							19.7		25.5	
	15.7	142 E3 C 30	Mo										
			Mn										
			Mmax										
	20.5	142 E3 D 30	Mo										
			Mn										
			Mmax										
	25.0	142 E3 E 30	Mo										
			Mn										
			Mmax										
4000	6.2	142 E3 A 40	Mo						6.2			6.2	
			Mn						4.1			4.1	
			Mmax						14.8			18.6	
	11.0	142 E3 B 40	Mo										
			Mn										
			Mmax										
	15.7	142 E3 C 40	Mo										
			Mn										
			Mmax										
	20.5	142 E3 D 40	Mo										
			Mn										
			Mmax										
6000	6.2	142 E3 D 60	Mo									6.2	
			Mn									3.2	
			Mmax									12.9	

M700-04200185 A			M700-05200250 A			M700-06200330 A		M700-06200440 A	M700-07200610 A	Drive part number
12	8	3	12	8	6	12		8	12	Drive switching frequency
17.6	18.5		21.5	24.8	25.0	32.0	33.0	40.0	61.0	Rated drive current
37.0			50.0			66.0	88.0		122.0	Drive output maximal current

Combined drive and motor performance	Motor type	Motor stall torque	Rated motor speed
Mo	142 E3 A 20	6.2	2000
Mn			
Mmax			
Mo	142 E3 B 20	11.0	
Mn			
Mmax			
Mo	142 E3 C 20	15.7	
Mn			
Mmax			
Mo	142 E3 D 20	20.5	
Mn			
Mmax			
Mo	142 E3 E 20	25.0	
Mn			
Mmax			
Mo	142 E3 A 30	6.2	3000
Mn			
Mmax			
Mo	142 E3 B 30	11.0	
Mn			
Mmax			
Mo	142 E3 C 30	15.7	
Mn			
Mmax			
Mo	142 E3 D 30	20.5	
Mn			
Mmax			
Mo	142 E3 E 30	25.0	
Mn			
Mmax			
Mo	142 E3 A 40	6.2	4000
Mn			
Mmax			
Mo	142 E3 B 40	11.0	
Mn			
Mmax			
Mo	142 E3 C 40	15.7	
Mn			
Mmax			
Mo	142 E3 D 40	20.5	
Mn			
Mmax			
Mo	142 E3 D 60	6.2	6000
Mn			
Mmax			

Key

Mo = stall torque
Mn = rated torque
Mmax = maximum torque

SERVO MOTOR SERIES

190E3

Drive part number				M700-03200080 A	M700-03200106 A	M700-04200137 A	M700-04200185 A		M700-05200250 A			M700-06200330 A		
Drive switching frequency				6		12		6	12	8	6	12	8	6
Rated drive current				8.0	8.8	13.7	17.6	18.5	21.5	24.8	25.0	32.0	33.0	
Drive output maximal current				16.0	21.2	27.4	37.0			50.0			66.0	
Rated motor speed	Motor stall torque	Motor type	Combined drive and motor performance											
2000	11.3	190 E3 A 20	Mo	11.1	11.3	11.3								
			Mn	10.7	10.8	10.8								
			Mmax	22.4	29.7	33.8								
	22.5	190 E3 B 20	Mo				22.5		22.5					
			Mn				20.6		20.6					
			Mmax				51.8		67.5					
	33.5	190 E3 C 20	Mo					25.8		30.2		33.5		
			Mn					22.6		26.5		29.4		
			Mmax					51.8		70.0		92.4		
	44.5	190 E3 D 20	Mo								34.3	44.5		
			Mn								29.2	37.9		
			Mmax								70.0	92.4		
	54.0	190 E3 E 20	Mo											41.6
			Mn											34.1
			Mmax											92.4
	63.0	190 E3 F 20	Mo											
			Mn											
			Mmax											
	71.0	190 E3 G 20	Mo											
			Mn											
			Mmax											
	77.0	190 E3 H 20	Mo											
			Mn											
			Mmax											
3000	11.3	190 E3 A 30	Mo			11.3	11.3							
			Mn			10.3	10.3							
			Mmax			25.5	33.8							
	22.5	190 E3 B 30	Mo							22.5		22.5		
			Mn							19.4		19.4		
			Mmax							46.5		61.4		
	33.5	190 E3 C 30	Mo										30.2	
			Mn										23.9	
			Mmax										61.4	
	44.5	190 E3 D 30	Mo											
			Mn											
			Mmax											
	54.0	190 E3 E 30	Mo											
			Mn											
			Mmax											
	63.0	190 E3 F 30	Mo											
			Mn											
			Mmax											
	71.0	190 E3 G 30	Mo											
			Mn											
			Mmax											
	77.0	190 E3 H 30	Mo											
			Mn											
			Mmax											
4000	11.3	190 E3 A 40	Mo				11.3		11.3					
			Mn				8.2		8.2					
			Mmax				25.9		33.8					
	22.5	190 E3 B 40	Mo										22.5	
			Mn										18.2	
			Mmax										46.2	
	33.5	190 E3 C 40	Mo											
			Mn											
			Mmax											
	44.5	190 E3 D 40	Mo											
			Mn											
			Mmax											

M700-06200440 A			M700-07200610 A			M700-07200750 A		M700-07200830 A		M700-08201160 A	M700-08201320 A	Drive part number
12	8	6	12	8	6	12	8	12	8	12		Drive switching frequency
33.0	40.0	44.0		61.0		65.3	75.0	65.6	80.5	89.3	89.8	Rated drive current
	88.0			122.0		150.0		166.0		232.0	264.0	Drive output maximal current

M700-06200440 A			M700-07200610 A			M700-07200750 A		M700-07200830 A		M700-08201160 A	M700-08201320 A	Combined drive and motor performance	Motor type	Motor stall torque	Rated motor speed
												Mo	190 E3 A 20	11.3	2000
												Mn			
												Mmax			
												Mo	190 E3 B 20	22.5	
												Mn			
												Mmax			
33.5												Mo	190 E3 C 20	33.5	
29.4												Mn			
100.5												Mmax			
44.5			44.5									Mo	190 E3 D 20	44.5	
37.9			37.9									Mn			
123.2			133.5									Mmax			
	48.6		54.0									Mo	190 E3 E 20	54.0	
	39.9		44.3									Mn			
	123.2		162.0									Mmax			
		48.5	63.0			63.0						Mo	190 E3 F 20	63.0	
		38.9	50.5			50.5						Mn			
		123.2	170.8			189.0						Mmax			
		54.7	71.0			71.0		71.0				Mo	190 E3 G 20	71.0	
		41.6	54.0			54.0		54.0				Mn			
		123.2	170.8			210.1		213.0				Mmax			
		59.3	77.0			77.0		77.0				Mo	190 E3 H 20	77.0	
		43.1	56.0			56.0		56.0				Mn			
		123.2	170.8			210.0		231.0				Mmax			
												Mo	190 E3 A 30	11.3	3000
												Mn			
												Mmax			
22.5												Mo	190 E3 B 30	22.5	
19.4												Mn			
67.5												Mmax			
	30.2		33.5									Mo	190 E3 C 30	33.5	
	23.9		26.5									Mn			
	81.8		100.5									Mmax			
		34.3	44.5			44.5						Mo	190 E3 D 30	44.5	
		25.6	33.2			33.2						Mn			
		81.8	113.5			133.5						Mmax			
			54.0			54.0		54.0		54.0		Mo	190 E3 E 30	54.0	
			34.2			34.2		34.2		34.2		Mn			
			113.5			139.5		154.4		162.0		Mmax			
				56.7			56.7		56.7	63.0		Mo	190 E3 F 30	63.0	
				31.7			31.7		31.7	35.2		Mn			
				113.5			139.5		154.4	189.0		Mmax			
					54.7		63.9		63.9	71.0		Mo	190 E3 G 30	71.0	
					27.9		32.6		32.6	36.2		Mn			
					113.5		139.5		154.4	213.0		Mmax			
							69.3		69.3	77.0	77.0	Mo	190 E3 H 30	77.0	
							33.3		33.3	37.0	37.0	Mn			
							139.5		154.4	215.8	231.0	Mmax			
												Mo	190 E3 A 40	11.3	4000
												Mn			
												Mmax			
22.5			22.5									Mo	190 E3 B 40	22.5	
18.2			18.2									Mn			
61.6			67.5									Mmax			
			33.5			33.5						Mo	190 E3 C 40	33.5	
			23.0			23.0						Mn			
			85.4			100.5						Mmax			
						44.5		44.5		44.5		Mo	190 E3 D 40	44.5	
						29.0		29.0		29.0		Mn			
						105.0		116.2		133.5		Mmax			

075U3

			Drive part number	M700-03400025 A	M700-03400031 A	M700-03400045 A	M700-03400062 A			M700-03400078 A		M700-03400100 A
			Drive switching frequency	12			8	6	12	8		
			Rated drive current	3.1	4.5		5.8	6.2	5.7	7.6	7.7	
			Drive output maximal current	6.2	9.0		12.4		15.6		20.0	
Rated motor speed	Motor stall torque	Motor type	Combined drive and motor performance									
2000	1.4	075 U3 A 20	Mo									
			Mn									
			Mmax									
	2.7	075 U3 B 20	Mo									
			Mn									
			Mmax									
	3.7	075 U3 C 20	Mo									
			Mn									
			Mmax									
	4.7	075 U3 D 20	Mo	4.7								
			Mn	4.5								
			Mmax	14.0								
3000	1.4	075 U3 A 30	Mo									
			Mn									
			Mmax									
	2.7	075 U3 B 30	Mo									
			Mn									
			Mmax									
	3.7	075 U3 C 30	Mo	3.7	3.7							
			Mn	3.3	3.3							
			Mmax	9.9	11.2							
	4.7	075 U3 D 30	Mo	4.7	4.7							
			Mn	4.2	4.2							
			Mmax	9.9	14.0							
4000	1.4	075 U3 A 40	Mo									
			Mn									
			Mmax									
	2.7	075 U3 B 40	Mo	2.7	2.7							
			Mn	2.1	2.1							
			Mmax	7.4	8.0							
	3.7	075 U3 C 40	Mo	3.7	3.7	3.7						
			Mn	2.8	2.8	2.8						
			Mmax	7.4	10.8	11.2						
	4.7	075 U3 D 40	Mo		4.7	4.7						
			Mn		3.8	3.8						
			Mmax		10.8	14.0						
6000	1.4	075 U3 A 60	Mo	1.4								
			Mn	1.1								
			Mmax	4.3								
	2.7	075 U3 B 60	Mo		2.7	2.7						
			Mn		1.9	1.9						
			Mmax		7.2	8.0						
	3.7	075 U3 C 60	Mo				3.7		3.7			
			Mn				2.8		2.8			
			Mmax				9.9		11.2			
	4.7	075 U3 D 60	Mo					4.7		4.7	4.7	4.7
			Mn					3.4		3.4	3.4	3.4
			Mmax					9.9		12.5	14.0	14.0

Key

Mo = stall torque
Mn = rated torque
Mmax = maximum torque

095U3

Drive part number				M700-03400025 A			M700-03400031 A		M700-03400045 A		M700-03400062 A		M700-03400078 A			M700-03400100 A			M700-04400150 A
Drive switching frequency				12	6	3	12	6	12	4	12	8	12	8	6	12	8	6	12
Rated drive current					2.5			3.1		4.5		5.8	5.7	7.6	7.8	5.7	7.7	9.2	11.5
Drive output maximal current					5.0			6.2		9.0		12.4		15.6			20.0		30.0
Rated motor speed	Motor stall torque	Motor type	Combined drive and motor performance																
2000	2.5	095 U3 A 20	Mo	2.5															
			Mn	2.4															
			Mmax	7.4															
	4.5	095 U3 B 20	Mo	4.5			4.5												
			Mn	4.3			4.3												
			Mmax	12.0			13.5												
	6.3	095 U3 C 20	Mo		5.9		6.3		6.3										
			Mn		5.5		5.9		5.9										
			Mmax		12.0		14.9		18.9										
	7.9	095 U3 D 20	Mo					7.4	7.9		7.9								
			Mn					6.8	7.3		7.3								
			Mmax					14.9	21.6		23.7								
	9.3	095 U3 E 20	Mo						9.3		9.3								
			Mn						8.5		8.5								
			Mmax						21.6		27.8								
3000	2.5	095 U3 A 30	Mo	2.5															
			Mn	2.3															
			Mmax	7.4															
	4.5	095 U3 B 30	Mo			4.0	4.5		4.5										
			Mn			3.6	4.1		4.1										
			Mmax			8.0	9.9		13.5										
	6.3	095 U3 C 30	Mo						6.3		6.3								
			Mn						5.6		5.6								
			Mmax						14.4		18.9								
	7.9	095 U3 D 30	Mo							7.2		7.7	7.9						
			Mn							6.3		6.7	6.9						
			Mmax							14.4		19.8	23.7						
	9.3	095 U3 E 30	Mo									9.0		9.0			9.0		9.3
			Mn									8.0		8.0			8.0		8.2
			Mmax									19.8		25.0			27.8		27.8
4000	2.5	095 U3 A 40	Mo	2.5			2.5												
			Mn	2.3			2.3												
			Mmax	6.0			7.4												
	4.5	095 U3 B 40	Mo						4.5		4.5								
			Mn						3.8		3.8								
			Mmax						10.8		13.5								
	6.3	095 U3 C 40	Mo									6.3	6.3			6.3			
			Mn									5.3	5.3			5.3			
			Mmax									14.9	18.7			18.9			
	7.9	095 U3 D 40	Mo											7.9			7.9		
			Mn											6.4			6.4		
			Mmax											18.7			23.7		
	9.3	095 U3 E 40	Mo												9.3			9.3	9.3
			Mn												7.4			7.4	7.4
			Mmax												18.7			24.0	27.8
6000	2.5	095 U3 A 60	Mo				2.5		2.5		2.5								
			Mn				2.0		2.0		2.0								
			Mmax				5.0		7.2		7.4								
	4.5	095 U3 B 60	Mo									4.5	4.5			4.5			
			Mn									3.2	3.2			3.2			
			Mmax									9.9	12.5			13.5			
	6.3	095 U3 C 60	Mo															6.3	6.3
			Mn															4.2	4.2
			Mmax															16.0	18.9

115U3

Drive part number				M700-03400025 A	M700-03400031 A	M700-03400045 A		M700-03400062 A				M700-03400078 A	
Drive switching frequency					12		8	12	8	6	4	12	8
Rated drive current				2.5	3.1		4.5		5.8	6.2		5.7	7.6
Drive output maximal current				5.0	6.2	9.0		12.4				15.6	
Rated motor speed	**Motor stall torque**	**Motor type**	**Combined drive and motor performance**										
2000	3.9	115 U3 A 20	Mo	3.9									
			Mn	3.7									
			Mmax	11.7									
	7.4	115 U3 B 20	Mo		7.4	7.4		7.4					
			Mn		7.3	7.3		7.3					
			Mmax		14.9	21.6		22.2					
	10.8	115 U3 C 20	Mo				10.5		10.5			10.8	
			Mn				9.8		9.8			10.1	
			Mmax				21.6		29.8			32.4	
	13.7	115 U3 D 20	Mo						13.0			13.7	
			Mn						11.3			11.9	
			Mmax						29.8			37.4	
	16.0	115 U3 E 20	Mo							14.4			15.2
			Mn							12.7			13.4
			Mmax							29.8			37.4
3000	3.9	115 U3 A 30	Mo	3.9	3.9	3.9							
			Mn	3.5	3.5	3.5							
			Mmax	8.0	9.9	11.7							
	7.4	115 U3 B 30	Mo				7.2		7.2			7.4	
			Mn				6.5		6.5			6.7	
			Mmax				14.4		19.8			22.2	
	10.8	115 U3 C 30	Mo								9.8		10.5
			Mn								8.6		9.2
			Mmax								19.8		25.0
	13.7	115 U3 D 30	Mo										
			Mn										
			Mmax										
	16.0	115 U3 E 30	Mo										
			Mn										
			Mmax										
4000	3.9	115 U3 A 40	Mo			3.9		3.9					
			Mn			3.0		3.0					
			Mmax			10.8		11.7					
	7.4	115 U3 B 40	Mo							7.4			7.4
			Mn							5.8			5.8
			Mmax							14.9			18.7
	10.8	115 U3 C 40	Mo										
			Mn										
			Mmax										
	13.7	115 U3 D 40	Mo										
			Mn										
			Mmax										
	16.0	115 U3 E 40	Mo										
			Mn										
			Mmax										
6000	3.9	115 U3 A 60	Mo						3.9			3.9	
			Mn						2.7			2.7	
			Mmax						9.9			11.7	
	7.4	115 U3 B 60	Mo										
			Mn										
			Mmax										

M700-03400078 A	M700-03400100 A				M700-04400150 A		M700-04400172 A		M700-05400270 A	Drive part number
6	12	8	6	4	12	8	12	8	12	Drive switching frequency
7.8	5.7	7.7	9.2	10.0	11.5	14.4	11.5	14.4	13.8	Rated drive current
15.6		20.0			30.0		34.4		54.0	Drive output maximal current

Combined drive and motor performance	Motor type	Motor stall torque	Rated motor speed
Mo	115 U3 A 20	3.9	2000
Mn			
Mmax			
Mo	115 U3 B 20	7.4	
Mn			
Mmax			
Mo	115 U3 C 20	10.8	
Mn			
Mmax			
Mo	115 U3 D 20	13.7	
Mn			
Mmax			
Mo	115 U3 E 20	16.0	
Mn			
Mmax			
Mo	115 U3 A 30	3.9	3000
Mn			
Mmax			
Mo	115 U3 B 30	7.4	
Mn			
Mmax			
Mo	115 U3 C 30	10.8	
Mn			
Mmax			
Mo	115 U3 D 30	13.7	
Mn			
Mmax			
Mo	115 U3 E 30	16.0	
Mn			
Mmax			
Mo	115 U3 A 40	3.9	4000
Mn			
Mmax			
Mo	115 U3 B 40	7.4	
Mn			
Mmax			
Mo	115 U3 C 40	10.8	
Mn			
Mmax			
Mo	115 U3 D 40	13.7	
Mn			
Mmax			
Mo	115 U3 E 40	16.0	
Mn			
Mmax			
Mo	115 U3 A 60	3.9	6000
Mn			
Mmax			
Mo	115 U3 B 60	7.4	
Mn			
Mmax			

Key

Mo = stall torque
Mn = rated torque
Mmax = maximum torque

142U3

			Drive part number	M700-03400025 A	M700-03400031 A	M700-03400045 A		M700-03400062 A				M700-03400078 A			M700-03400100 A	
			Drive switching frequency	6	12		8	12	8	6	3	12	8	6	8	6
			Rated drive current	2.5	3.1		4.5		5.8	6.2		5.7	7.6	7.8	7.7	9.2
			Drive output maximal current	5.0	6.2	9.0		12.4				15.6			20.0	
Rated motor speed	Motor stall torque	Motor type	Combined drive and motor performance													
2000	6.2	142 U3 A 20	Mo	5.8	6.2	6.2										
			Mn	5.6	5.9	5.9										
			Mmax	12.0	14.9	18.6										
	11.0	142 U3 B 20	Mo				10.7		10.7			11.0				
			Mn				10.1		10.1			10.4				
			Mmax				21.6		29.8			33.0				
	15.7	142 U3 C 20	Mo							14.8			15.2		15.2	
			Mn							13.8			14.3		14.3	
			Mmax							29.8			37.4		47.1	
	20.5	142 U3 D 20	Mo											18.2		18.2
			Mn											16.5		16.5
			Mmax											37.4		48.0
	25.0	142 U3 E 20	Mo													
			Mn													
			Mmax													
3000	6.2	142 U3 A 30	Mo			6.2		6.2								
			Mn			5.5		5.5								
			Mmax			14.4		18.6								
	11.0	142 U3 B 30	Mo								9.6		10.7		10.7	
			Mn								8.3		9.2		9.2	
			Mmax								19.8		25.0		32.0	
	15.7	142 U3 C 30	Mo													
			Mn													
			Mmax													
	20.5	142 U3 D 30	Mo													
			Mn													
			Mmax													
	25.0	142 U3 E 30	Mo													
			Mn													
			Mmax													
4000	6.2	142 U3 A 40	Mo						6.2			6.2				
			Mn						4.1			4.1				
			Mmax						14.9			18.6				
	11.0	142 U3 B 40	Mo													11.0
			Mn													8.1
			Mmax													24.0
	15.7	142 U3 C 40	Mo													
			Mn													
			Mmax													
	20.5	142 U3 D 40	Mo													
			Mn													
			Mmax													
	25.0	142 U3 E 40	Mo													
			Mn													
			Mmax													
6000	6.2	142 U3 A 60	Mo											6.2		6.2
			Mn											3.2		3.2
			Mmax											12.5		16.0
	11.0	142 U3 B 60	Mo													
			Mn													
			Mmax													

M700-03400100 A	M700-04400150 A			M700-04400172 A				M700-05400270 A			M700-05400300 A	M700-06400350 A	Drive part number
4	12	8	6	12	8	6	4	12	8	4	8	12	Drive switching frequency
10.0	11.5	14.4	15.0	11.5	14.4	16.1	17.2	13.8	17.6	23.7	21.0	23.0	Rated drive current
20.0		30.0			34.4				54.0		60.0	70.0	Drive output maximal current

Combined drive and motor performance	Motor type	Motor stall torque	Rated motor speed
Mo	142 U3 A 20	6.2	2000
Mn			
Mmax			
Mo	142 U3 B 20	11.0	
Mn			
Mmax			
Mo	142 U3 C 20	15.7	
Mn			
Mmax			
Mo	142 U3 D 20	20.5	
Mn			
Mmax			
Mo	142 U3 E 20	25.0	
Mn			
Mmax			
Mo	142 U3 A 30	6.2	3000
Mn			
Mmax			
Mo	142 U3 B 30	11.0	
Mn			
Mmax			
Mo	142 U3 C 30	15.7	
Mn			
Mmax			
Mo	142 U3 D 30	20.5	
Mn			
Mmax			
Mo	142 U3 E 30	25.0	
Mn			
Mmax			
Mo	142 U3 A 40	6.2	4000
Mn			
Mmax			
Mo	142 U3 B 40	11.0	
Mn			
Mmax			
Mo	142 U3 C 40	15.7	
Mn			
Mmax			
Mo	142 U3 D 40	20.5	
Mn			
Mmax			
Mo	142 U3 E 40	25.0	
Mn			
Mmax			
Mo	142 U3 A 60	6.2	6000
Mn			
Mmax			
Mo	142 U3 B 60	11.0	
Mn			
Mmax			

Key

Mo = stall torque
Mn = rated torque
Mmax = maximum torque

190U3

Drive part number	M700-03400062 A	M700-03400078 A		M700-03400100 A		M700-04400150 A			M700-04400172 A		M700-05400270 A		M700-05400300 A
Drive switching frequency	8	12	8		4	12	8	6	8	6	8	6	12
Rated drive current	5.8	5.7	7.6	7.7	10.0	14.5	14.4	15.0	14.4	16.1	17.6	20.3	14.9
Drive output maximal current	12.4	15.6		20.0			30.0		34.4		54.0		60.0

Rated motor speed	Motor stall torque	Motor type	Combined drive and motor performance												
2000	11.3	190 U3 A 20	Mo	11.3	11.3										
			Mn	10.8	10.8										
			Mmax	29.8	33.8										
	22.5	190 U3 B 20	Mo					22.3	22.5						
			Mn					20.4	20.6						
			Mmax					48.0	67.5						
	33.5	190 U3 C 20	Mo							30.2		30.2		30.2	33.5
			Mn							26.5		26.5		26.5	29.4
			Mmax							72.0		82.6		100.5	100.5
	44.5	190 U3 D 20	Mo								34.3		34.3	40.1	
			Mn								29.2		29.2	34.1	
			Mmax								72.0		82.6	129.6	
	54.0	190 U3 E 20	Mo												41.6
			Mn												34.1
			Mmax												129.6
	63.0	190 U3 F 20	Mo												48.5
			Mn												38.9
			Mmax												129.6
	71.0	190 U3 G 20	Mo												
			Mn												
			Mmax												
	77.0	190 U3 H 20	Mo												
			Mn												
			Mmax												
3000	11.3	190 U3 A 30	Mo			11.3	11.3		11.3						
			Mn			10.3	10.3		10.3						
			Mmax			25.0	32.0		33.8						
	22.5	190 U3 B 30	Mo							22.5		22.5		22.5	
			Mn							19.4		19.4		19.4	
			Mmax							48.0		55.0		67.5	
	33.5	190 U3 C 30	Mo												25.8
			Mn												20.4
			Mmax												86.4
	44.5	190 U3 D 30	Mo												
			Mn												
			Mmax												
	54.0	190 U3 E 30	Mo												
			Mn												
			Mmax												
	63.0	190 U3 F 30	Mo												
			Mn												
			Mmax												
	71.0	190 U3 G 30	Mo												
			Mn												
			Mmax												
	77.0	190 U3 H 30	Mo												
			Mn												
			Mmax												
4000	11.3	190 U3 A 40	Mo					11.3	11.3						
			Mn					8.2	8.2						
			Mmax					24.0	33.8						
	22.5	190 U3 B 40	Mo												22.5
			Mn												18.2
			Mmax												64.8
	33.5	190 U3 C 40	Mo												
			Mn												
			Mmax												
	44.5	190 U3 D 40	Mo												
			Mn												
			Mmax												

M700-05400300 A		M700-06400350 A			M700-06400420 A		M700-06400470 A		M700-07400660 A		M700-07400770 A	M700-07401000 A	M700-08401340 A	Drive part number
8	6	12	8	6	8	6	8	6	12	8		12		Drive switching frequency
21.0	24.0	23.0	30.0	35.0	30.0	35.0	30.0	35.0	41.0	48.0	51.0	48.0	72.0	Rated drive current
60.0		70.0			84.0		94.0		132.0		154.0	200.0	268.0	Drive output maximal current

														Combined drive and motor performance	Motor type	Motor stall torque	Rated motor speed
														Mo	190 U3 A 20	11.3	2000
														Mn			
														Mmax			
														Mo	190 U3 B 20	22.5	
														Mn			
														Mmax			
														Mo	190 U3 C 20	33.5	
														Mn			
														Mmax			
40.1		44.5												Mo	190 U3 D 20	44.5	
34.1		37.9												Mn			
133.5		133.5												Mmax			
48.6		54.0												Mo	190 U3 E 20	54.0	
39.9		44.3												Mn			
144.0		162.0												Mmax			
	48.5		56.7		56.7				63.0					Mo	190 U3 F 20	63.0	
	38.9		45.5		45.5				50.5					Mn			
	144.0		168.0		189.0				189.0					Mmax			
	54.7		63.9		63.9		63.9		71.0					Mo	190 U3 G 20	71.0	
	41.6		48.6		48.6		48.6		54.0					Mn			
	144.0		168.0		201.6		213.0		213.0					Mmax			
			69.3		69.3		69.3		77.0					Mo	190 U3 H 20	77.0	
			50.4		50.4		50.4		56.0					Mn			
			168.0		201.6		225.6		231.0					Mmax			
														Mo	190 U3 A 30	11.3	3000
														Mn			
														Mmax			
														Mo	190 U3 B 30	22.5	
														Mn			
														Mmax			
30.2		33.5												Mo	190 U3 C 30	33.5	
23.9		26.5												Mn			
96.0		100.5												Mmax			
	34.3		40.1		40.1				44.5					Mo	190 U3 D 30	44.5	
	25.6		29.9		29.9				33.2					Mn			
	96.0		112.0		133.5				133.5					Mmax			
				41.6		41.6		41.6	54.0					Mo	190 U3 E 30	54.0	
				26.3		26.3		26.3	34.2					Mn			
				112.0		134.4		150.4	162.0					Mmax			
				48.5		48.5		48.5	63.0					Mo	190 U3 F 30	63.0	
				27.1		27.1		27.1	35.2					Mn			
				112.0		134.4		150.4	189.0					Mmax			
				54.7		54.7		54.7		63.9	63.9	71.0		Mo	190 U3 G 30	71.0	
				27.9		27.9		27.9		32.6	32.6	36.2		Mn			
				112.0		134.4		150.4		211.2	213.0	213.0		Mmax			
										69.3	69.3		77.0	Mo	190 U3 H 30	77.0	
										33.3	33.3		37.0	Mn			
										211.2	231.0		231.0	Mmax			
														Mo	190 U3 A 40	11.3	4000
														Mn			
														Mmax			
22.5														Mo	190 U3 B 40	22.5	
18.2														Mn			
67.5														Mmax			
			33.5		33.5									Mo	190 U3 C 40	33.5	
			23.0		23.0									Mn			
			84.0		100.5									Mmax			
									44.5					Mo	190 U3 D 40	44.5	
									29.0					Mn			
									133.5					Mmax			

250U3

Drive part number				M700-04400150 A	M700-04400172 A	M700-05400270 A			M700-05400300 A			M700-06400350 A				M700-06400420 A		
Drive switching frequency				3	6	8	6	4	6	4	3	12	8	6	4	8	6	4
Rated drive current				15.0	16.1	17.6	20.3	23.7	24.0	27.9	30.0	23.0	30.0	35.0		30.0	35.0	42.0
Drive output maximal current				30.0	34.4	54.0			60.0			70.0				84.0		
Rated motor speed	Motor stall torque	Motor type	Combined drive and motor performance															
1000	92.0	250 U3 D 10	Mo	81.0	86.5	90.2						92.0						
			Mn	66.0	70.5	73.5						75.0						
			Mmax	162.0	185.8	276.0						276.0						
	116.0	250 U3 E 10	Mo				109.0		109.0			116.0						
			Mn				86.5		86.5			92.0						
			Mmax				291.6		324.0			348.0						
	136.0	250 U3 F 10	Mo					122.4	127.8				133.3			133.3		
			Mn					95.4	99.6				103.9			103.9		
			Mmax					291.6	324.0				378.0			408.0		
1500	92.0	250 U3 D 15	Mo					82.8		82.8			90.2			90.2		
			Mn					60.3		60.3			65.7			65.7		
			Mmax					194.4		216.0			252.0			276.0		
	116.0	250 U3 E 15	Mo								102.1			109.0			109.0	
			Mn								66.9			71.4			71.4	
			Mmax								216.0			252.0			302.4	
	136.0	250 U3 F 15	Mo												122.4			122.4
			Mn												75.6			75.6
			Mmax												252.0			302.4
2000	92.0	250 U3 D 20	Mo								81.0			86.5			86.5	
			Mn								57.2			61.1			61.1	
			Mmax								162.0			189.0			226.8	
	116.0	250 U3 E 20	Mo															104.4
			Mn															65.7
			Mmax															226.8
	136.0	250 U3 F 20	Mo															
			Mn															
			Mmax															
2500	92.0	250 U3 D 25	Mo															82.8
			Mn															55.8
			Mmax															176.4
	116.0	250 U3 E 25	Mo															
			Mn															
			Mmax															
	136.0	250 U3 F 25	Mo															
			Mn															
			Mmax															

250U3

M700-06400470 A			M700-07400660 A				M700-07400770 A				M700-07401000 A		M700-08401340 A	Drive part number
6	4	3	12	8	6	4	12	8	6	4	8	6	12	Drive switching frequency
35.0	42.0	46.0	41.0	48.0	57.0	66.0	44.0	51.0	59.0	70.0	61.0	73.0	72.0	Rated drive current
94.0			132.0				154.0				200.0		268.0	Drive output maximal current

Combined drive and motor performance	Motor type	Motor stall torque	Rated motor speed
Mo	250 U3 D 10	92.0	1000
Mn			
Mmax			
Mo	250 U3 E 10	116.0	
Mn			
Mmax			
Mo	250 U3 F 10	136.0	
Mn			
Mmax			
Mo	250 U3 D 15	92.0	1500
Mn			
Mmax			
Mo	250 U3 E 15	116.0	
Mn			
Mmax			
Mo	250 U3 F 15	136.0	
Mn			
Mmax			
Mo	250 U3 D 20	92.0	2000
Mn			
Mmax			
Mo	250 U3 E 20	116.0	
Mn			
Mmax			
Mo	250 U3 F 20	136.0	
Mn			
Mmax			
Mo	250 U3 D 25	92.0	2500
Mn			
Mmax			
Mo	250 U3 E 25	116.0	
Mn			
Mmax			
Mo	250 U3 F 25	136.0	
Mn			
Mmax			

M700-06400470 A			M700-07400660 A				M700-07400770 A				M700-07401000 A		M700-08401340 A
			136.0										
			106.0										
			408.0										
			92.0										
			67.0										
			276.0										
109.0			116.0										
71.4			76.0										
338.4			348.0										
	122.4		136.0										
	75.6		84.0										
	338.4		408.0										
86.5			92.0										
61.1			65.0										
253.8			276.0										
	104.4			113.7			116.0						
	65.7			71.5			73.0						
	253.8			348.0			348.0						
		119.7			127.8			133.3					136.0
		71.3			76.1			79.4					81.0
		253.8			356.4			408.0					408.0
	82.8			90.2			92.0						
	55.8			60.8			62.0						
	197.4			276.0			276.0						
					109.0				109.0		113.7		116.0
					65.8				65.8		68.6		70.0
					277.2				323.4		348.0		348.0
						122.4				122.4		127.8	136.0
						69.3				69.3		72.4	77.0
						277.2				323.4		408.0	408.0

Key

Mo = stall torque
Mn = rated torque
Mmax = maximum torque

8.3.2 Unimotor hd + Digitax HD

400 V range – 0.7 Nm to 51 Nm (6.2 to 451 lb-in) with 300% peak stall torque
200 V range – 0.7 Nm to 45 Nm (6.2 to 398 lb-in) with 300% peak stall torque

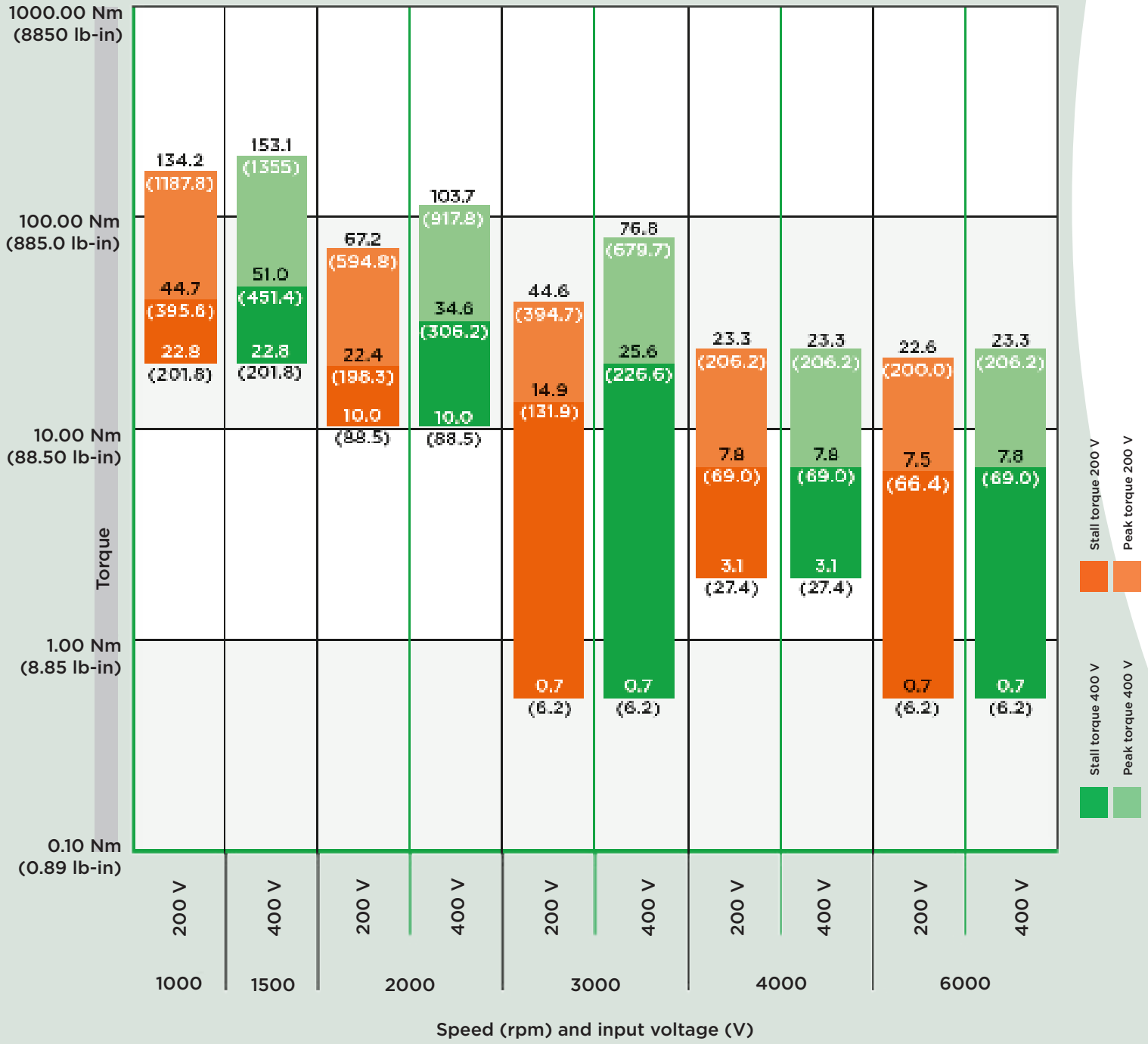

Drive ratings

200 V Single Phase

Frame Size W x D x H (mm)	Frame Size 01 40 x 174 x 233			Frame Size 02 40 x 174 x 278		Frame Size 03 40 x 174 x 328
Line Supply	Single Phase AC 200 V...240 V (± 10%) @ 45...66 Hz					
M75X-...	01200022	01200040	01200065	02200090	02200120	03200160
Output Servo						
Rated Current (A)	1.1	2.2	3.5	5.6	7.5	10.8
Max Peak Current (A)	6.6	12	19.5	27	36	48
Output AC Induction						
Max Continuous Current (A)	1.1	2.2	3.5	5.6	7.5	10.8
Open Loop Peak Current (A)	3.3	6	9.8	13.5	18	24
Closed Loop Peak Current (A)	6.6	12	19.5	27	36	48
Motor Power at 230 V (kW)	0.18	0.37	0.75	1.1	1.5	2.2
Overload						
Closed-loop Overload	Maximum closed loop peak current for 0.25 s					
Open-loop Overload	Maximum open loop peak current for 8 s					

200 V Three Phase

Frame Size W x D x H (mm)	Frame Size 01 40 x 174 x 233			Frame Size 02 40 x 174 x 278		Frame Size 03 40 x 174 x 328
Line supply	Three Phase AC 200 V...240 V (± 10%) @ 45...66 Hz					
M75X-...	01200022	01200040	01200065	02200090	02200120	03200160
Input						
Max Power (kW)	4			5.3		10*
Output Servo						
Rated Current (A)	2.2	4	6.5	9	12	16
Max Peak Current (A)	6.6	12	19.5	27	36	48
Output AC Induction						
Max Continuous Current (A)	2.2	4	6.5	9	12	16
Open Loop Peak Current (A)	3.3	6	9.8	13.5	18	24
Closed Loop Peak Current (A)	6.6	12	19.5	27	36	48
Motor Power at 230 V (kW)	0.37	0.75	1.1	2.2	2.2	4.0
Overload						
Closed-loop Overload	300 % for 0.25 s or 200 % for 4 s					
Open-loop Overload	150 % for 8 s					

400 V Three Phase

Frame Size W x D x H (mm)	Frame Size 01 40 x 174 x 233			Frame Size 02 40 x 174 x 278			Frame Size 03 40 x 174 x 328	
Line Supply	Three Phase AC 380 V...480 V (± 10%) @ 45...66 Hz							
M75X-...	01400015	01400030	01400042	02400060	02400080	02400105	03400135	03400160
Input								
Max Power (kW)	6.5			8.7			10/13*	
Output Servo								
Rated Current (A)	1.5	3	4.2	6	8	10.5	13.5	16
Max Peak Current (A)	4.5	9	12.6	18	24	31.5	40.5	48
Output AC Induction								
Max Continuous Current (A)	1.5	3	4.2	6	8	10.5	13.5	16
Open Loop Peak Current (A)	2.3	4.5	6.3	9	12	15.8	20.3	24
Closed Loop Peak Current (A)	4.5	9	12.6	18	24	31.5	40.5	48
Motor Power at 400 V (kW)	0.37	0.75	1.5	2.2	3.0	4.0	5.5	5.5
Overload								
Closed-loop Overload	300 % for 0.25 s or 200 % for 4 s							
Open-loop Overload	150 % for 8 s							

* External AC line reactor required.

200V Three phase

Nominal speed 6000 rpm - 300% overload								
Motor	Drive	Hybrid Cable	Stall Torque [Nm]	Peak Torque [Nm]	Inertia [kg·cm²]	Drive Capacitance [µF]	Cont. Power [kW]	Time to 6000 rpm [ms]*
HD055EDA60	M75x-01200022	HYBAxAxxx	0.69	2.1	0.14	580	0.43	8.5
HD055EDB60	M75x-01200040	HYBAxAxxx	1.1	3.4	0.25	580	0.57	9.2
HD055EDC60	M75x-01200040	HYBAxAxxx	1.6	4.8	0.36	580	0.75	9.5
HD067EDA60	M75x-01200040	HYBAxAxxx	1.4	4.3	0.30	580	0.82	8.8
HD067EDB60	M75x-01200065	HYBAxAxxx	2.5	7.5	0.53	580	1.4	8.9
HD089EDA60	M75x-02200090	HYBAxAxxx	3.1	9.3	0.87	1160	1.7	11.7
HD089EDB60	M75x-02200120	HYBAxAxxx	5.3	16.0	1.6	1160	2.4	12.6
HD089EDC60	M75x-03200160	HYBBxAxxx	7.5	22.6	2.3	1880	3.1	13.0

Nominal speed 4000 rpm - 300% overload								
Motor	Drive	Hybrid Cable	Stall Torque [Nm]	Peak Torque [Nm]	Inertia [kg·cm²]	Drive Capacitance [µF]	Cont. Power [kW]	Time to 4000 rpm [ms]*
HD089EDA40	M75x-01200065	HYBAxAxxx	3.1	9.3	0.87	580	1.2	7.8
HD089EDB40	M75x-02200090	HYBAxAxxx	5.3	16.0	1.6	1160	1.9	8.4
HD089EDC40	M75x-02200120	HYBAxAxxx	7.8	23.3	2.3	1160	2.7	8.4

Nominal speed 3000 rpm - 300% overload								
Motor	Drive	Hybrid Cable	Stall Torque [Nm]	Peak Torque [Nm]	Inertia [kg·cm²]	Drive Capacitance [µF]	Cont. Power [kW]	Time to 3000 rpm [ms]*
HD055EDA30	M75x-01200022	HYBAxAxxx	0.69	2.1	0.14	580	0.21	4.2
HD055EDB30	M75x-01200022	HYBAxAxxx	1.1	3.4	0.25	580	0.32	4.6
HD067EDA30	M75x-01200022	HYBAxAxxx	1.4	4.3	0.30	580	0.43	4.4
HD055EDC30	M75x-01200022	HYBAxAxxx	1.6	4.8	0.36	580	0.45	4.8
HD067EDB30	M75x-01200040	HYBAxAxxx	2.5	7.5	0.53	580	0.75	4.4
HD089EDA30	M75x-01200040	HYBAxAxxx	2.8	8.4	0.87	580	0.88	6.5
HD067EDC30	M75x-01200040	HYBAxAxxx	3.6	10.9	0.75	580	1.1	4.3
HD089EDB30	M75x-01200065	HYBAxAxxx	5.3	16.0	1.6	580	1.5	6.3
HD089EDC30	M75x-02200090	HYBAxAxxx	7.8	23.3	2.3	1160	2.1	6.3
HD115EDB30	M75x-02200120	HYBAxAxxx	10.0	30.0	4.4	1160	2.4	9.2
HD115EDC30	M75x-03200160	HYBBxAxxx	14.3	42.9	6.4	1880	3.2	9.4
HD142EDC30	M75x-03200160	HYBBxBxxx	14.9	44.6	17.0	1880	4.7	23.9

Nominal speed 2000 rpm - 300% overload								
Motor	Drive	Hybrid Cable	Stall Torque [Nm]	Peak Torque [Nm]	Inertia [kg·cm²]	Drive Capacitance [µF]	Cont. Power [kW]	Time to 2000 rpm [ms]*
HD115EDB20	M75x-02200090	HYBAxAxxx	10.0	30.0	4.4	1160	1.8	6.2
HD115EDC20	M75x-02200120	HYBAxAxxx	14.3	42.9	6.4	1160	2.4	6.2
HD115EDD20	M75x-03200160	HYBBxAxxx	18.4	55.3	8.4	1880	3.2	6.4
HD142EDC20	M75x-03200160	HYBBxBxxx	22.4	67.2	17.0	1880	4.1	10.6

Nominal speed 1000 rpm - 300% overload								
Motor	Drive	Hybrid Cable	Stall Torque [Nm]	Peak Torque [Nm]	Inertia [kg·cm²]	Drive Capacitance [µF]	Cont. Power [kW]	Time to 1000 rpm [ms]*
HD142EDC10	M75x-02200090	HYBAxAxxx	22.8	68.3	17.0	1160	2.2	5.2
HD142EDD10	M75x-02200120	HYBAxAxxx	28.7	86.0	22.1	1160	2.8	5.4
HD142EDE10	M75x-03200160	HYBBxAxxx	34.6	103.7	27.2	1880	3.3	5.5
HD190EDC10	M75x-03200160	HYBBxBxxx	44.7	134.2	54.6	1880	4.7	8.5

* Acceleration time to nominal speed is based on 1:1 motor to load inertia ratio

400V Three phase

Nominal speed 6000 rpm – 300% overload								
Motor	Drive	Hybrid Cable	Stall Torque [Nm]	Peak Torque [Nm]	Inertia [kg·cm²]	Drive Capacitance [µF]	Cont. Power [kW]	Time to 6000 rpm [ms]*
HD055UDA60	M75x-01400015	HYBAxAxxx	0.69	2.1	0.14	110	0.43	8.5
HD055UDB60	M75x-01400015	HYBAxAxxx	1.1	3.4	0.25	110	0.57	9.2
HD055UDC60	M75x-01400030	HYBAxAxxx	1.6	4.8	0.36	110	0.75	9.5
HD067UDA60	M75x-01400030	HYBAxAxxx	1.4	4.3	0.30	110	0.82	8.8
HD067UDB60	M75x-01400042	HYBAxAxxx	2.5	7.5	0.53	110	1.4	8.9
HD067UDC60	M75x-02400060	HYBAxAxxx	3.6	10.9	0.75	290	1.9	8.7
HD089UDA60	M75x-01400042	HYBAxAxxx	3.1	9.3	0.87	110	1.7	11.7
HD089UDB60	M75x-02400080	HYBAxAxxx	5.3	16.0	1.6	290	2.4	12.6
HD089UDC60	M75x-02400105	HYBBxAxxx	7.8	23.3	2.3	290	3.1	12.6

Nominal speed 4000 rpm – 300% overload								
Motor	Drive	Hybrid Cable	Stall Torque [Nm]	Peak Torque [Nm]	Inertia [kg·cm²]	Drive Capacitance [µF]	Cont. Power [kW]	Time to 4000 rpm [ms]*
HD089UDA40	M75x-01400030	HYBAxAxxx	3.1	9.3	0.87	110	1.2	7.8
HD089UDB40	M75x-02400060	HYBAxAxxx	5.3	16.0	1.6	290	1.9	8.4
HD089UDC40	M75x-02400080	HYBAxAxxx	7.8	23.3	2.3	290	2.7	8.4

Nominal speed 3000 rpm – 300% overload								
Motor	Drive	Hybrid Cable	Stall Torque [Nm]	Peak Torque [Nm]	Inertia [kg·cm²]	Drive Capacitance [µF]	Cont. Power [kW]	Time to 3000 rpm [ms]*
HD055UDA30	M75x-01400015	HYBAxAxxx	0.69	2.1	0.14	110	0.21	4.2
HD055UDB30	M75x-01400015	HYBAxAxxx	1.1	3.4	0.25	110	0.32	4.6
HD055UDC30	M75x-01400015	HYBAxAxxx	1.6	4.8	0.36	110	0.45	4.8
HD067UDA30	M75x-01400030	HYBAxAxxx	1.4	4.3	0.30	110	0.43	4.4
HD067UDB30	M75x-01400015	HYBAxAxxx	2.4	7.2	0.53	110	0.75	4.6
HD067UDC30	M75x-01400030	HYBAxAxxx	3.6	10.9	0.75	110	1.1	4.3
HD089UDA30	M75x-01400030	HYBAxAxxx	3.1	9.3	0.87	110	0.91	5.9
HD089UDB30	M75x-01400042	HYBAxAxxx	5.3	16.0	1.6	110	1.5	6.3
HD089UDC30	M75x-02400060	HYBAxAxxx	7.8	23.3	2.3	290	2.1	6.3
HD115UDB30	M75x-02400080	HYBAxAxxx	10.0	30.0	4.4	290	2.4	9.2
HD115UDC30	M75x-02400105	HYBBxAxxx	14.3	42.9	6.4	290	3.2	9.4
HD115UDD30	M75x-03400135	HYBBxAxxx	18.4	55.3	8.4	470	4.2	9.5
HD142UDC30	M75x-03400160	HYBBxAxxx	22.8	68.3	17.0	470	5.3	15.7
HD142UDD30	M75x-03400160	HYBBxBxxx	25.6	76.8	22.1	470	6.0	18.1

Nominal speed 2000 rpm – 300% overload								
Motor	Drive	Hybrid Cable	Stall Torque [Nm]	Peak Torque [Nm]	Inertia [kg·cm²]	Drive Capacitance [µF]	Cont. Power [kW]	Time to 2000 rpm [ms]*
HD115UDB20	M75x-01400042	HYBAxAxxx	10.0	30.0	4.4	110	1.8	6.2
HD115UDC20	M75x-02400060	HYBAxAxxx	14.3	42.9	6.4	290	2.4	6.2
HD115UDD20	M75x-02400080	HYBAxAxxx	18.4	55.3	8.4	290	3.2	6.4
HD142UDC20	M75x-02400105	HYBBxAxxx	22.8	68.3	17.0	290	4.1	10.4
HD142UDD20	M75x-03400135	HYBBxAxxx	28.7	86.0	22.1	470	4.9	10.8
HD142UDE20	M75x-03400160	HYBBxAxxx	34.6	103.7	27.2	470	5.6	11.0

Nominal speed 1500 rpm – 300% overload								
Motor	Drive	Hybrid Cable	Stall Torque [Nm]	Peak Torque [Nm]	Inertia [kg·cm²]	Drive Capacitance µF]	Cont. Power [kW]	Time to 1500 rpm [ms]*
HD142UDC15	M75x-02400080	HYBAxAxxx	22.8	68.3	17.0	290	3.2	7.8
HD142UDD15	M75x-02400105	HYBAxAxxx	28.7	86.0	22.1	290	3.9	8.1
HD142UDE15	M75x-03400135	HYBAxAxxx	34.6	103.7	27.2	470	4.5	8.2
HD190UDC15	M75x-03400160	HYBBxBxxx	51.0	153.1	54.6	470	7.3	11.2

9 Cables and Connections

9.1 Cables form an integral part of a servo system installation, the ready made cables from Control Techniques allow system installers to avoid intricate, time consuming assembly normally associated with connecting servo systems.

9.1.1 Features

- Low smoke and low halogen flame retardant construction.
- Power cables and connectors UL recognised.
- Complies with DESINA coding - Orange for power, Green for signal.
- Optimum noise immunity.
- No need for crimp and insertion / removal tools.
- Encoder cable has low voltage drop for longer cable lengths and separately screened thermistor wires.
- Pre-assembled cables offer consistent quality at competitive prices.
- Power cables either with or without brake wires.
- Cable assembly type identification label.
- Brake wires are separately shielded within the power cable.

9.1.2 Wide range of accessories

In addition we offer a range of accessories to cover your system requirements:

- Feedback and power cables for static and dynamic applications
- Conversion cables
- Connector kits
- Flange kits

9.1.3 Reliability and safety

Control Techniques maintains the highest standards of cable integrity and reliability in compliance with all regulatory requirements. All cables and connectors are constructed to meet safety standards and protected against EMC noise immunity, to ensure reliable and failsafe operation.

9.1.4 Variants

Choosing the right cables and connections for your application is critical in getting optimum performance. Control Techniques has an extensive range of options that can meet the requirements for different servo motor and drive combinations to suit most applications:

- Phase conductors from 1.0 mm^2 (10 A) to 25 mm^2 (70 A).
- With and without brake wire pairs.
- Motor end connector or ferrules for hybrid box.
- Drive end tailored to suit drive, i.e. ferrules or ring terminals.
- Hybrid option, combining both power and signal into one convenient cable.

9.1.5 Matched motor and drive combinations

Our cables are designed to ensure optimum connection between Unidrive M or Digitax HD drives, and Unimotor fm or hd motors.

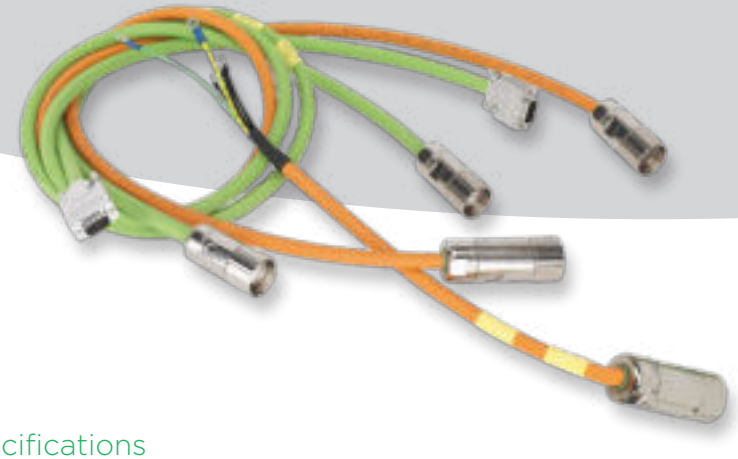

9.1.6 General Cable Specifications

	POWER		SIGNAL	
Jacket Type	**PVC**	**PUR**	**PUR**	**PVC**
Electrical	▪ Nominal voltage: 1,000 V UL Power cores Uo/U 0.6/1 kV Control cores Uo/U 300/500 kV ▪ Test voltage: 3kV ▪ Conductor resistance (at 20°C): according to class 6 VDE 0295, EN 60228 ▪ Insulation resistance (at 20°C): >20 MΩ x km		▪ Nominal voltage: 1,000 V UL Maximum 350 V (VDE/DIN) ▪ Test voltage: maximum 3kV ▪ Conductor resistance (at 20°C): according to class 6 VDE 0295, EN 60228 ▪ Insulation resistance (at 20°C): > 20 MΩ x km ▪ Mutual capacitance: core / core approx. 70 pF/m core / screen approx. 110 pF/m ▪ Speed of propagation (Vp): 5.05 ns/m (66%)	
Mechanical	▪ Minimum bending radius: 15 x outer diameter (fixed installation)	▪ Minimum bending radius: 5 x outer diameter (fixed installation) ▪ Minimum bending radius: 7.5 x outer diameter (dynamic installation) ▪ Installation: cable into drag-chain ▪ Maximum speed: 5 m/s ▪ Maximum acceleration: 40 m/s² ▪ Drag chain length: maximum 15 m ▪ Number of cycle: 5,000,000		▪ Minimum bending radius: 15 x outer diameter (fixed installation
Thermal	▪ Operating temperature range: -30°C to +80°C ▪ Maximum operating temperature according to UL: +80°C			
Chemical	▪ Oil resistance: according to UL1581	▪ Oil resistance: according to EN 50363-10-2, OIL 80°C UL 758		▪ Oil resistance: according to UL1581
Fire Behaviour	▪ Flame retardant: according to EN60332-1 / Cable flame test: FT1 CSA C.22.2 n° 210			
		▪ Halogen-free: according to IEC 60754-1		
Approvals	▪ Desina standard / UL/CSA AWM ▪ EC Low voltage directive 73/23/EEC and CE marking directive 93/68/EEC ▪ UE directive 2002/95/CE restriction of the use of hazardous substance (RoHS)			

9.2 ORDERING INFORMATION

9.2.1 Power Cable

1	2	3	4	5	6	7	8	9	10	11	12
M	B	B	A	A	A	0	0	2	5	S	S

Cable type (field N°1&2)

MB = Power braked

MS = Power

Jacket type (field N°3)

A = PVC fixed installation

B = PUR dynamic installation

Length metre (*) (field N°7,8,9&10)

0010 = 1 metre

0025 = 2.5 metres

1000 = 100 metres max

Optional:

Progressive alphanumeric code for customer special requests (field N°11&12). e.g. 01 = SpeedTec connectors

Phase & conductor size (field N°4)		Drive end connection (field N°5)	Motor end connection (field N°6)
MS = Un-braked	**MB =** Braked	**A =** Unidrive M size 3-4-5, Digitax HD/ST, Unidrive SP size 0-1-2, Flying Leads (Ultrasonic Welding)	**A =** 6 way power size 1, from 1 to 4 mm^2
A = 1 mm^2	+ 0.5 mm^2	**B =** Unidrive M size 6, Unidrive SP size 3	**B =** 6 way power size 1.5, 4 mm^2
B = 2.5 mm^2	+ 0.5 mm^2	**C =** Unidrive M size 7	**C =** 6 way power size 1.5, from 6 to 10 mm^2
C = 4 mm^2	+ 1 mm^2	**D =** Unidrive M size 8	**D =** Hybrid box ring terminal M6
D = 6 mm^2	+ 1 mm^2	**P =** Motor power 6 way Extension	**E =** Hybrid box ring terminal M8
E = 10 mm^2	+ 1 mm^2	**S =** Special	**S =** Special
F = 16 mm^2	+ 1 mm^2	**X =** Cut end	**X =** Cut end
G = 25 mm^2	+ 1 mm^2		

- (*) Length metre / cable requiring (cm) lengths will be rounded up to the next highest half metre; e.g. 2.1 will be changed to a 2.5 metre cable.
- Maximum cable assembly length 100 metres.

9.2.2 Signal Cable

1	2	3	4	5	6	7	8	9	10	11	12
S	I	B	A	A	A	0	0	2	5	S	S

Length metre (**) (field N°s 7-10)

0010 = 1 metre

0025 = 2.5 metres

1000 = 100 metres max

***Jacket type (field N°3)**

A = PVC fixed installation

B = PUR dynamic installation

Optional:

Progressive alphanumeric code for customer special requests (field N°11&12). e.g. 01 = SpeedTec connectors

Cable & Jacket type, Phase & conductor size (field N°s 1,2&4)	Drive end connection (field N°5)	Motor end connection (field N°6)
SI*A = SI - (Incremental encoder + SinCos EnDat 2.1)	**A =** Unidrive M700, Unidrive SP, Epsilon EP, Digitax HD/SP (Encoder 15 pin D type straight connector)	**A =** Unimotor 17 way connector (SI/SE)
SR*B = SR - (Resolver)	**B =** Flying Leads (Ultrasonic Welding)	**B =** Unimotor 12 way connector (SR/SS)
SS*C = SS - (Sincos Hiperface Encoder)	**F =** Digitax HD (M750) low profile 90° - inc. SC EnDat (Encoder 15 pin D type straight connector)	**C =** Unimotor 90° 17 way connector (SI/SE)
SE*E = SE - (Serial EnDat 2.2 only)	**P =** Signal male plug Extension	**D =** Unimotor 90° 12 way connector (SR/SS)
	S = Special	**G =** Unidrive M / Unidrive SP / Digitax ST (Encoder 15 pin D type connector hd) Extension
	T = Digitax HD (M750) low profile 90° - EnDat only (Encoder 15 pin D type straight connector)	**S =** Special
	X = Cut end	**X =** Cut end

Cable	Feedback option
SI	CR, CA, EM, FM, EC, FC, EB, FB
SR	AR, AE
SS	TL, UL, RA, SA
SE	EF, FF, EG, FG, GB, HB, EN, FN

- (**) Length metre / cable requiring (cm) lengths will be rounded up to the next highest half metre; e.g. 2.1 will be changed to a 2.5 metre cable.
- Maximum cable assembly, please refer to page 15.
- For complete cable construction, please refer to page 9.

Encoder breakout kits available from Control Techniques

Part Number	MK Description	Image
82700000020200	Encoder Breakout Kit, M75x	
82000000012200	15 way D type convertor (UT01) RoH	

9.2.3 Power & Signal Combined

1	2	3	4	5	6	7	8	9	10	11	12
H	Y	B	A	A	A	0	0	2	5	S	S

Cable & Jacket type (field N°1,2&3)

HYB = Power standard

Jacket type (field N°3)

B = PUR dynamic installation

Length metre (*) (field N°7,8,9&10)

0010 = 1 metre

0025 = 2.5 metres

1000 = 100 metres max

Optional:

Progressive alphanumeric code for customer special requests (field N°11&12). e.g. 01 = SpeedTec connectors

Phase & conductor size (field N°4)	Drive end connection (field N°5)	Motor end connection (field N°6)
A = 1.5 mm² + 0.75 mm²	**A =** Unidrive M size 3-4, 15 pin D type straight connector	**A =** Power & Signal combined connector size 1
B = 2.5 mm² + 1 mm²	**B =** Unidrive M size 5, 15 pin D type straight connector	**B =** Power & Signal combined connector size 1.5
C = 4 mm² + 1 mm²	**C =** Unidrive M size 6, 7 & 8, 15 pin D type straight connector	**S =** Special
	D = Digitax HD size 01, 02 & 03, 15 pin D type 90° low profile connector	**X =** Cut end
	E = Digitax HD size 01 & 02 complete with EMC bracket and terminal block fitted, 15 pin D type 90° low profile connector	
	F = Digitax HD size 03 complete with EMC bracket and terminal block fitted, 15 pin D type 90° low profile connector	
	S = Special	
	X = Cut end	

- (*) Length metre / cable requiring (cm) lengths will be rounded up to the next highest half metre; e.g. 2.1 will be changed to a 2.5 metre cable.
- Maximum cable assembly please refer to page 139.

9.3 CABLE CONSTRUCTION

9.3.1 Power Cable

Phase and conductor size (current rating CEI EN 60204-1:2006-09 at 40° C - installation method B2)	Power + number of cores x cross section (mm^2)	Nomial outer diameter (mm) no brake	Nominal outer diameter (mm) braked	Tolerance (mm)
1 mm^2 (10.1 Amps)	4G1 + (2 x 0.5)	8.1	9.9	± 0.3
2.5 mm^2 (17.4 Amps)	4G2.5 + (2 x 0.5)	10.9	12.5	± 0.3
4 mm^2 (23 Amps)	4G4 + (2 x 1)	12.1	12.5	± 0.3
6 mm^2 (30 Amps)	4G6 + (2 x 1)	14.8	16.2	± 0.4
10 mm^2 (40 Amps)	4G10 + (2 x 1)	18.3	19.5	± 0.4
16mm^2 (54 Amps)	4G16 + (2 x 1)	21.4	21.6	± 0.5
25 mm^2 (70 Amps)	4G25 + (2 x 1)	26.5	26.9	± 0.5

9.3.2 Signal Cable

Cable code and type	Construction cross section (mm^2)	Nominal outer diameter (mm)	Tolerance (mm)
SI - (Incremental encoder + SinCos EnDat 2.1)	6 x 2 x 0.25 + 1 x 2 x 0.34 + 1 x 2 x 0.50 mm^2	10.2	± 0.3
SR - (Resolver)	4 x (2 x 0.25) ST mm^2	8.9	± 0.3
SS - (Sincos Hiperface Encoder)	4 x (2 x 0.15) + 1 x 2 x 0.50 mm^2	7.3	± 0.3
SE - (Serial EnDat 2.2 only)	4 x (2 x 0.15) + 1 x 2 x 0.50 ST mm^2	7.3	± 0.3

9.3.3 Power & Signal Combined

Phase and conductor size (current rating CEI EN 60204-1:2006-09 at 40° C - installation method B2)	Construction cross section (mm^2)	Nominal outer diameter (mm)	Tolerance (mm)
A - 1.5 mm^2 + 0.75 mm^2 (13.1 Amps)	4G1.5 + (2 x 0.75) ST+ (2 x AWG24) + 2x (2 x AWG28)	13.7	± 0.3
B - 2.5 mm^2 + 1 mm^2 (17.4 Amps)	4G2.5 + (2 x 0.75) ST+ (2 x AWG24) + 2x (2 x AWG28)	14.8	± 0.3
C - 4 mm^2 + 1 mm^2 (23 Amps)	4G4.0 + (2 x 1.0) ST+ (2 x AWG24) + 2x (2 x AWG28) / ST	16.1	± 0.3

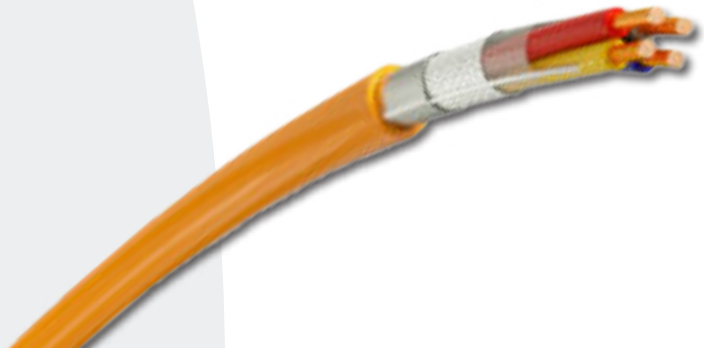

9.4 CONNECTOR DETAILS

9.4.1 POWER PLUG - Motor end

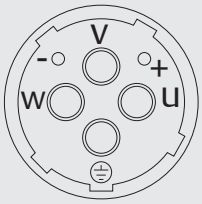

Size 1			Size 1.5		
	With brake	Without brake		With brake	Without brake
Pin	Function	Function	Pin	Function	Function
1	Phase U (R)	Phase U (R)	U	Phase U (R)	Phase U (R)
2	Phase V (S)	Phase V (S)	V	Phase V (S)	Phase V (S)
3	Ground	Ground	⏚	Ground	Ground
4	Phase W (T)	Phase W (T)	W	Phase W (T)	Phase W (T)
5	Brake		+	Brake	
6	Brake		-	Brake	
Shell	Screen	Screen	Shell	Screen	Screen

9.4.2 SIGNAL PLUG - Motor end

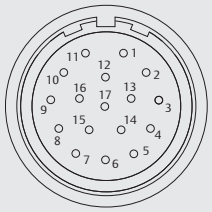

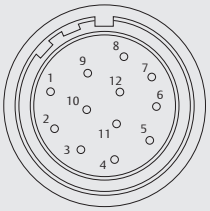

	SI		SE	SR	SS
	Incremental encoder (CA, CR)	Heidenhain Sincos EnDat 2.1 absolute encoders (EM, FM, EC, FC, EB, FB)	Heidenhain EnDat 2.2 only absolute encoders (EF, FF, EG, FG, GB, HB, EN, FN)	Resolver (AE, AR)	SICK SinCos Hiperface encoders (RA, TL, UL, SA)
Pin	Function	Function	Function	Function	Function
1	Thermistor	Thermistor	Thermistor	Excitation High	REF Cos
2	Thermistor	Thermistor	Thermistor	Excitation Low	+ Data
3		Screen (Optical only)	Screen (Optical only)	Cos High	- Data
4	S1			Cos Low	+ Cos
5	S1 Inverse			Sin High	+ Sin
6	S2			Sin Low	REF Sin
7	S2 Inverse			Thermistor	Thermistor
8	S3	+ Clock	+ Clock	Thermistor	Thermistor
9	S3 Inverse	- Clock	- Clock		Screen
10	Channel A	+ Cos			0 Volts
11	Index	+ Data	+ Data		-
12	Index Inverse	- Data	- Data		+ V
13	Channel A Inverse	- Cos			
14	Channel B	+ Sin			
15	Channel B Inverse	- Sin			
16	+ V	+ V	+ V		
17	0 Volts	0 Volts	0 Volts		
Body	Screen	Screen	Screen		Screen

9.4.3 POWER & SIGNAL COMBINED PLUG - Motor end

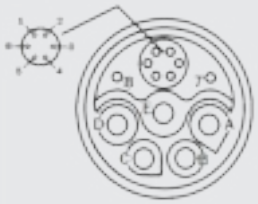

Size 1			Size 1.5		
Heidenhain EnDat 2.2 only absolute encoders (EF, FF, EG, FG, GB, HB, EN, FN)			Heidenhain EnDat 2.2 only absolute encoders (EF, FF, GB, HB)		
	With brake	Without brake		With brake	Without brake
Pin	Function	Function	Pin	Function	Function
1	+ Volts	+ Volts	1	+ Volts	+ Volts
2	0 Volts	0 Volts	2	0 Volts	0 Volts
3	+ Data	+ Data	3	+ Data	+ Data
4	- Data	- Data	4	- Data	- Data
5	+ Clock	+ Clock	5	+ Clock	+ Clock
6	- Clock	- Clock	6	- Clock	- Clock
7	- Brake		N	-	-
8	+ Brake		U	Phase U (R)	Phase U (R)
A	Phase U (R)	Phase U	V	Phase V (S)	Phase V (S)
B	Phase V (S)	Phase U (R)	PE	Ground	Ground
C	Phase W (T)	Phase W (T)	W	Phase W (T)	Phase W (T)
D	-	-	+	Brake	
E	Ground	Ground	-	Brake	

Please note the thermistor is wired through the encoder for the power/signal combined.

9.4.4 15 WAY PLUG - Drive end

	SI		SE	SR	SS
	Incremental encoders (CA, CR)	SinCos absolute encoders (EM, FM, EC, FC, EB, FB)	EnDat 2.2 only absolute encoders (EF, FF, EG, FG, GB, HB, EN, FN)	Resolvers (AE, AR)	SinCos Hiperface encoders (TL, UL, RA, SA)
Pin	Function	Function	Function	Function	Function
1	Channel A	+ Cos	+ Data	+ Cos	+ Cos
2	Channel A Inverse	- Cos	- Data	- Cos	REF Cos
3	Channel B	+ SIn	+ Clock	+ Sin	+ Sin
4	Channel B Inverse	-Sin	- Clock	- Sin	REF Sin
5	Index	+ Data		+ Excitation	+ Data
6	Index Inverse	- Data		- Excitation	- Data
7	S1				
8	S1 Inverse				
9	S2				
10	S2 Inverse				
11	S3	+ Clock			
12	S3 Inverse	- Clock			
13	+ V	+ V	+ V		+ V
14	0 Volts	0 Volts	0 Volts	Thermistor	0 Volts
15	Thermistor	Thermistor	Thermistor	Thermistor	Thermistor
Body	Screen	Screen	Screen	Screen	Screen

9.5 CABLE DIAMETER SELECTION

Cable and connector required according to motor size

9.5.1 3 Phase VPWM drives 200-240Vrms - Unimotor fm

Motor Frame Size (mm)	075E3				095E3					115E3					
Frame length	A	B	C	D	A	B	C	D	E	A	B	C	D	E	
Speed 2,000 (rpm)															
Cross section (mm²)	1.0	1.0	1.0	1.0	1.0	1.0	1.0	1.0	1.0	1.0	1.0	1.0	1.0	2.5	
Recommended connector size	1	1	1	1	1	1	1	1	1	1	1	1	1	1	
Speed 3,000 (rpm)															
Cross section (mm²)	1.0	1.0	1.0	1.0	1.0	1.0	1.0	1.0	1.0	1.0	1.0	2.5	2.5	2.5	
Recommended connector size	1	1	1	1	1	1	1	1	1	1	1	1	1	M6	
Speed 4,000 (rpm)															
Cross section (mm²)	1.0	1.0	1.0	1.0	1.0	1.0	1.0	2.5	2.5	1.0	2.5	2.5	2.5	4.0	
Recommended connector size	1	1	1	1	1	1	1	1	1	1	1	1	1	M6	
Speed 6,000 (rpm)															
Cross section (mm²)	1.0	1.0	1.0	1.0	1.0	1.0	2.5	♦	♦	1.0	2.5	♦	♦	♦	
Recommended connector size	1	1	1	1	1	1	1	♦	♦	1	1	♦	♦	♦	

9.5.2 3 Phase VPWM drives 380-480Vrms - Unimotor fm

Motor Frame Size (mm)	075U3				095U3					115U3					
Frame length	A	B	C	D	A	B	C	D	E	A	B	C	D	E	
Speed 2,000 (rpm)															
Cross section (mm²)	1.0	1.0	1.0	1.0	1.0	1.0	1.0	1.0	1.0	1.0	1.0	1.0	1.0	1.0	
Recommended connector size	1	1	1	1	1	1	1	1	1	1	1	1	1	1	
Speed 3,000 (rpm)															
Cross section (mm²)	1.0	1.0	1.0	1.0	1.0	1.0	1.0	1.0	1.0	1.0	1.0	1.0	1.0	2.5	
Recommended connector size	1	1	1	1	1	1	1	1	1	1	1	1	1	1	
Speed 4,000 (rpm)															
Cross section (mm²)	1.0	1.0	1.0	1.0	1.0	1.0	1.0	1.0	1.0	1.0	1.0	1.0	2.5	2.5	
Recommended connector size	1	1	1	1	1	1	1	1	1	1	1	1	1	1	
Speed 6,000 (rpm)															
Cross section (mm²)	1.0	1.0	1.0	1.0	1.0	1.0	1.0	♦	♦	1.0	1.0	♦	♦	♦	
Recommended connector size	1	1	1	1	1	1	1	♦	♦	1	1	♦	♦	♦	

9.5.3 3 Phase VPWM drives 200-240Vrms - Unimotor hd

Motor Frame Size (mm)	067ED			089ED			115ED			142ED			190ED		
Frame length	A	B	C	A	B	C	B	C	D	C	D	E	C	D	F
Speed 2,000 (rpm)										Speed 1,000 (rpm)					
Cross section (mm²)	♦	♦	♦	♦	♦	♦	1.0	2.5	2.5	1.0	2.5	2.5	4.0	4.0	10.0
Recommended connector size	♦	♦	♦	♦	♦	♦	1	1	1	1	1	1	1.5	1.5	1.5
Speed 3,000 (rpm)										Speed 2,000 (rpm)					
Cross section (mm²)	1.0	1.0	1.0	1.0	1.0	1.0	2.5	2.5	♦	4.0	6.0	6.0	10.0	♦	♦
Recommended connector size	1	1	1	1	1	1	1	1	♦	1.5	1.5	1.5	1.5	♦	♦
Speed 4,000 (rpm)										Speed 3,000 (rpm)					
Cross section (mm²)	♦	♦	♦	1.0	1.0	2.5	♦	♦	♦	6.0	10.0	♦	♦	♦	♦
Recommended connector size	♦	♦	♦	1	1	1	♦	♦	♦	1.5	1.5	♦	♦	♦	♦
Speed 6,000 (rpm)										Speed 6,000 (rpm)					
Cross section (mm²)	1.0	1.0	♦	1.0	2.5	4.0	♦	♦	♦	♦	♦	♦	♦	♦	♦
Recommended connector size	1	1	♦	1	1	1	♦	♦	♦	♦	♦	♦	♦	♦	♦

♦ *frame size not available*

- The information contained in this specification is for guidance only and does not form part of any contract.
- Control Techniques Dynamics have an ongoing process of development and reserves the right to change the specification without notice.

142E3					190E3								Motor Frame Size (mm
A	B	C	D	E	A	B	C	D	E	F	G	H	Frame length
Speed 2,000 (rpm)													
1.0	1.0	2.5	2.5	4.0	1.0	2.5	6.0	10.0	10.0	16.0	16.0	25.0	Cross section (mm²)
1	1	1	1	1.5	1.5	1.5	1.5	1.5	1.5		M6		Recommended connector size
Speed 3,000 (rpm)													
1.0	2.5	2.5	4.0	6.0	2.5	6.0	10.0	16.0	25.0	25.0	25.0	25.0	Cross section (mm²)
1	1	1	1.5	1.5	1.5	1.5	1.5			M6			Recommended connector size
Speed 4,000 (rpm)													
1.0	2.5	4.0	6.0	10.0	2.5	10.0	16.0	25.0	♦	♦	♦	♦	Cross section (mm²)
1	1	1.5	1.5	1.5	1.5	1.5	M6		♦	♦	♦	♦	Recommended connector size
Speed 6,000 (rpm)													
2.5	♦	♦	♦	♦	♦	♦	♦	♦	♦	♦	♦	♦	Cross section (mm²)
1	♦	♦	♦	♦	♦	♦	♦	♦	♦	♦	♦	♦	Recommended connector size

142U3					190U3								250U3		
A	B	C	D	E	A	B	C	D	E	F	G	H	D	E	F
Speed 2,000 (rpm)													Speed 1,000 (rpm)		
1.0	1.0	1.0	1.0	2.5	1.0	1.0	2.5	4.0	4.0	6.0	10.0	10.0	4.0	4.0	6.0
1	1	1	1	1	1.5	1.5	1.5	1.5	1.5	1.5	1.5	1.5	1.5	1.5	1.5
Speed 3,000 (rpm)													Speed 1,500 (rpm)		
1.0	1.0	1.0	2.5	2.5	1.0	2.5	4.0	6.0	10.0	10.0	16.0	16.0	6.0	10.0	10.0
1	1	1	1	1	1.5	1.5	1.5	1.5	1.5	1.5	M6		1.5	1.5	1.5
Speed 4,000 (rpm)													Speed 2,000 (rpm)		
1.0	1.0	2.5	4.0	4.0	1.0	4.0	6.0	10.0	♦	♦	♦	♦	10.0	16.0	16.0
1	1	1	1.5	1.5	1.5	1.5	1.5	1.5	♦	♦	♦	♦	1.5	M8	
Speed 6,000 (rpm)													Speed 2,500 (rpm)		
1.0	2.5	♦	♦	♦	♦	♦	♦	♦	♦	♦	♦	♦	16.0	25.0	25.0
1	1	♦	♦	♦	♦	♦	♦	♦	♦	♦	♦	♦	M8		

9.5.4 3 Phase VPWM drives 380-480Vrms - Unimotor hd

067UD			089UD			115UD			142UD			190UD			
A	B	C	A	B	C	B	C	D	C	D	E	C	D	F	
Speed 2,000 (rpm)									Speed 1,500 (rpm)						
♦	♦	♦	♦	♦	♦	1.0	1.0	1.0	1.0	1.0	2.5	2.5	4.0	6.0	
♦	♦	♦	♦	♦	♦	1	1	1	1	1	1	1.5	1.5	1.5	
Speed 3,000 (rpm)									Speed 2,000 (rpm)						
1.0	1.0	1.0	1.0	1.0	1.0	1.0	1.0	2.5	2.5	2.5	2.5	4.0	♦	♦	
1	1	1	1	1	1	1	1	1	1	1	1	1.5	♦	♦	
Speed 4,000 (rpm)									Speed 3,000 (rpm)						
♦	♦	♦	1.0	1.0	1.0	♦	♦	♦	2.5	4.0	6.0	♦	♦	♦	
♦	♦	♦	1	1	1	♦	♦	♦	1	1.5	1.5	♦	♦	♦	
Speed 6,000 (rpm)									Speed 6,000 (rpm)						
1.0	1.0	1.0	1.0	1.0	1.0	♦	♦	♦	♦	♦	♦	♦	♦	♦	
1	1	1	1	1	1	♦	♦	♦	♦	♦	♦	♦	♦	♦	

- The recommended connector has been selected using the connector manufacturer's de-rating values applied to a motor at full operational temperature.

9.5.5 3 Phase VPWM drives 380 - 480 Vrms - Unimotor fm fan blown

Motor Frame Size (mm)	095U5		115U5		142U5		190U5	
Frame length	D	E	D	E	D	E	G	H
Speed 2,000 (rpm)								
Cross section (mm^2)	♦	♦	♦	♦	♦	♦	10.0	16.0
Recommended connector size	♦	♦	♦	♦	♦	♦	1.5	M6
Speed 3,000 (rpm)								
Cross section (mm^2)	1.0	1.0	2.5	2.5	2.5	4.0	16.0	25.0
Recommended connector size	1	1	1	1	1.5	1.5	M6	M8
Speed 4,000 (rpm)								
Cross section (mm^2)	1.0	1.0	2.5	4.0	4.0	6.0	25.0	tba
Recommended connector size	1	1	1	Hybrid Box	1.5	1.5	M8	M8
Speed 6,000 (rpm)								
Cross section (mm^2)	2.5	2.5	4.0	6.0	10.0	16.0	♦	♦
Recommended connector size	1	1	M6	M6	1.5	M6	♦	♦

9.6 MAXIMUM CABLE LENGTH

The maximum cable length is restricted by the effect of the voltage drop on the power supply to the encoder.

9.6.1 Maximum recommended length

Cable Types	Maximum Cable Length									
	Resolver		Renco	Sick		Heidenhain				
SIBA SC EnDat			CR 50m	CA 50m		EB/FB 100m				
SEBE Serial EnDat Only						EG/FG 100m	GB/HB 100m	EN/FN 100m	EC/FC 100m	EF/FF 100m
SSBA SinCos SICK Hiperface				TL/UL 100m	RA/SA 100m					
SRBA Resolver	AE 100m	AR 100m								
HYB Power + Signal Combined						EG/FG 100m	EF/FF 100m	EN/FN 100m	GB/HB 100m	

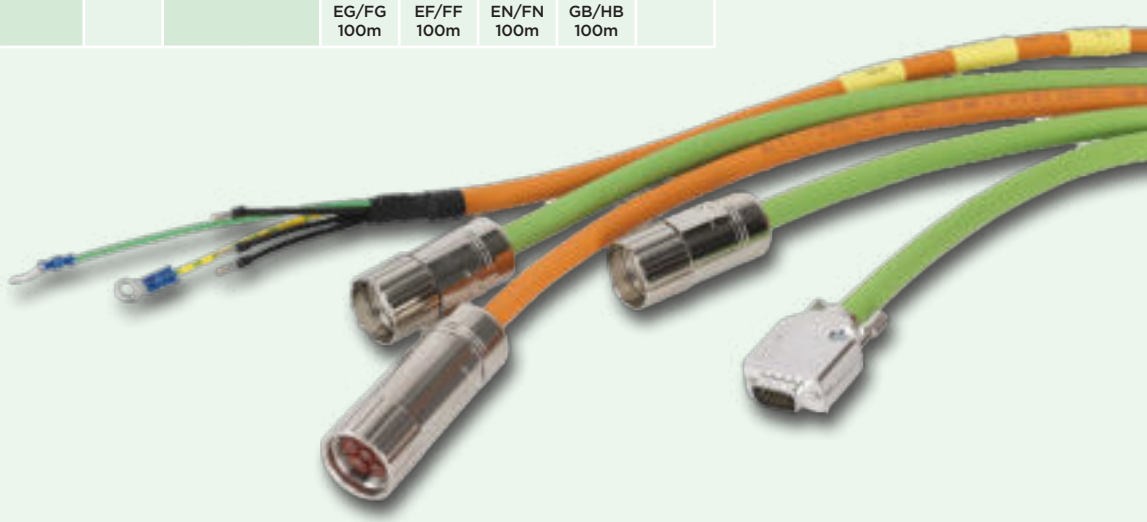

10 General Information

The manufacturer accepts no liability for any consequences resulting from inappropriate, negligent or incorrect installation or adjustment of the optional operating parameters of the equipment or from mismatching the variable speed drive with the motor.

The contents of this guide are believed to be correct at the time of printing. In the interests of a commitment to a policy of continuous development and improvement, the manufacturer reserves the right to change the specification of the product or its performance, or the contents of the guide, without notice.

All rights reserved. No parts of this guide may be reproduced or transmitted in any form or by any means, electrical or mechanical including photocopying, recording or by an information storage or retrieval system, without permission in writing from the publisher.

Control Techniques Dynamics is your servo motor specialist.
With connections in over 70 countries, we're open for business wherever you are in the world.

For more information visit
www.controltechniquesdynamics.com

CONTROL TECHNIQUES DYNAMICS
A NIDEC BRAND

© 2019 Control Techniques Dynamics Limited. The information contained in this brochure is for guidance only and does not form part of any contract. The accuracy cannot be guaranteed as Control Techniques Dynamics Ltd have an ongoing process of development and reserve the right to change the specification of their products without notice.

P.N. BROCH_CTD_TECH_DATAL_ISS01_EN – 0109-2019